Ⅰ. MODEL AND TECHNICAL SPECIFICATIONS

Technical performance specification

整机重量		Total weight	8770kg
标准铲斗容量		Bucket capacity	0.3m3
发动机 Engine	型号	Model	洋马发动机 Yanmar 4TNV94L-BVBKC
	排量	Displacement	3.054L
	额定输出功率/转速	Engine power/rpm	33.7 kw/2100 rpm
	最大扭矩	Max. torque	193.2-210.6 N.m/126±100rpm
速度 Speed	轮胎行走速度	Wheel travelling speed	25 km/h
	履带行走速度	Track travelling speed	2.3km/h
	回转速度	Swing speed	9rpm
	最大爬坡能力	Max. grade ability	30°
液压及液压体容量 Hydraulic system	液压系统	Hydraulic system	力士乐 Rexroth
	泵型式	Pump	变量 variable capacity pump
	设定压力	Pressure	25 Mpa
	流量	Displacement	132 L/min
	液压油箱容量	Capacity of hydraulic tank	175 L
	燃油箱容量	Capacity of fuel tank	150 L
	发动机油容量最大	Engine oil capacity	12 L

单位 unit: mm

A 总长度 3.6m 动臂+2m 斗杆	Total weight	8770KGS
B 总高度 3.6m 动臂+2m 斗杆	Overall dimension	6570x2120x2980
C 后端回转半径	Counter weight turning radius	1836
D 发动机机罩高度	Engine hood height	2104
E 配重离地间隙	Counter weight ground clearance	1120
F 上部回转平台总宽度	Upper structure width	2000
G 驾驶室高度	Cabin height (wheels up)	2982
H 轮胎总宽度	Tire width	2120
J 最小离地间隙	Ground clearance	270
K 升起后轮间距	Wheels up wheel gauge	3400
L 升起后回转中心至后桥间距	Distance of swing center to rear wheel (wheels up)	1682
M 降下后轮间距	Wheels down wheel gauge	3560
N 降下后回转中心至后桥间距	Distance of swing center to rear wheel (wheels down)	1767
O 降下后轮胎离地间隙	Rear wheel ground clearance(wheel up)	300
P 升起后履带离地间隙	Tracks ground clearance(wheel down)	330
Q 升起后总高	Total height (wheels down)	3190

R 履带轮距	Track wheel track	2050
S 履带宽度	Track width	400
T 左右履带总宽度	Track outer width	2160

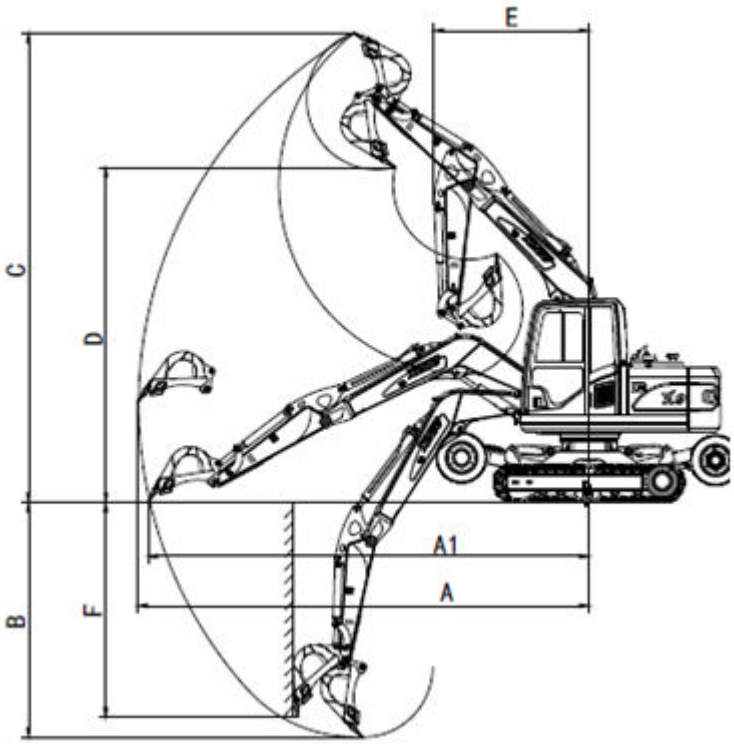

工作装置 Working device		3.6m 动臂+2m 斗杆 Boom 3.6m+Arm 2m
A 最大挖掘半径	Max. digging radius	6880
A1 最大挖掘半径 （地面）	Max. digging radius (on ground)	6735
B 最大挖掘深度	Max. digging depth	3772
C 最大切削高度	Max. digging depth	7130
D 最大卸载高度	Max. dumping height	5220
E 最小回转半径	Min. turning radius	2617
F 最大垂直挖深	Max. vertical digging depth	3425
铲斗挖掘力（KN）	Bucket digging force (KN)	56
斗杆挖掘力（KN）	Bucket arm digging force (KN)	36

Ⅱ.SAFETY INFORMATION

Working with an Excavator can be dangerous; it could result in injury or death if proper precautions are not taken! We urgent you to read this manual carefully! This safety information is provided to operators and maintenance mechanics to ensure the safe operation and maintenance of the Excavator. It's essential that you read and familiarize yourself with this information, which explains safety requirements and precautions and specific hazards of which you should be aware. This also applies to any personnel which might be working on the machine only occasionally. Such as during set up or maintenance.

Careful adherence to safety guidelines will permit safe operation and maintenance and potentially prevent personal injury to yourself and others, and possible damage to the excavator.

Important safety notes such as **DANGER**, **WARNING** or **IMPORTANT** are used throughout this manual to emphasize important or critical instructions.

In this manual DANGER, CAUTION or NOTE are defined as follows:

DANGER: denotes an extreme intrinsic hazard which could result in a high probability of death or serious injury if proper precautions are not taken.

WARNING: denotes a reminder of safety practices or directs attention to unsafe practices if proper precautions are not taken.

NOTICE describes operation and maintenance procedures which should be followed to keep your excavator operation and to insure long machine life and /or to facilitate certain procedures.

DESTINED USE

Destined use is considered part of observing and adhering to all regulations and inspection and maintenance guidelines given in this Operation and Maintenance Manual.

The excavator with the standard backhoe any only be used to loosen, pick up, move, load and dump soil, gravel, rock, or other material and to load trucks, barges, conveyor belts, or rock crushing system.

Special guidelines are applicable for machines used for lifting applications and special safety devices must be installed.

Any other use above and beyond the applications described above, such breaking out rock or demolishing building, pounding in posts etc. requires special attachments and safety devices.

If the machine is exposed to the risk of falling down objects during operation, the cab of the machine must be fitted with a safety device.

Transporting personnel or loads etc. is not considered destined use and is therefore prohibited. The manufacturer/dealer is not responsible for any resulting damage. Any risk must be carried by the user himself.

GENERAL SAFETY INFORMATION

Study the Operation and Maintenance Manual before operating or working on the excavator. Make sure that you have additional information for special attachments of your machine, read it and understand it!

Allow only authorized personnel informed about the safety rules to operate, service or repair the excavator.

Allow only properly trained personnel to operate or work on the excavator, make sure to clearly specify the person who is responsible for set up, maintenance and repairs.

Make sure the operator knows his responsibility regarding the observance of traffic regulations and permit him to refuse any unsafe instructions given by a third person.

Any persons still in training should only operate or work on the machine under the supervision and guidance of an experienced person.

Check and observe any person working or operating the excavator periodically and regularly, if they observe safety instructions and guideline given in the Operation and Maintenance Manual.

Wear proper work clothing when operating or working on the excavator .Ring , watches, bracelets and loose clothing such as ties, scarves, unbuttoned or unzipped shirts and jackets are dangerous and could cause injury! Wear proper safety equipments , such as safety glasses, safety shoes, hardhats, work gloves, reflector vests and ear protection.

Always tilt up the safety lever before leaving the operator's seat. Do not carry tools, replacement parts or other supplies while climbing on or off the excavator. Never use the steering column, control lever or joysticks as handholds. Never jump off the excavator, climb on or off the excavator using only the steps, rails and handles provided.

When climbing on or off the excavator, use both hands for support and face the machine. If needed, use the front window as an escape hatch.

If no other guidelines are given, perform maintenance and repairs utilizing the following precautions:

Parking excavator on firm and level ground. Rest the working attachment on the ground.

Placing all control in neutral position and raise the safety lever.

Turning the engine off and remove the ignition key.

Before checking the hydraulic circuit, move all joysticks and pedals with the ignition key in contact position to relieve the servo pressure and the remaining pressure in the different main circuits. In additions, relieve the pressure in the hydraulic tank as described in the Operation and Maintenance Manual.

Never operation the excavator without a complete walk around inspection. Check if all warning decals are on the machine and if they are all legible.

Secure all loose parts on the excavator.

Observe all danger and safety guidelines.

For certain special applications, the excavator must be equipped with specific safety equipment. Use the excavator only, if they are installed and functioning properly.

Never perform any changes, additions or modifications on the machine, which could influence the safety, without obtaining the written permission from the manufacturer. This also applies to the installation and adjustment of safety device and safety valve as well as to any welding on load carrying parts.

Do not install any equipment or attachments made by other manufacturers or any which are not specifically authorized by Shandong Rhinoceros Engineering Machinery Co.,Ltd for installation without first obtaining the written permission from Shandong Rhinoceros Engineering Machinery Co.,Ltd.
Never work underneath the excavator unless it is safely resting on the ground and /or is properly blocked and supported and /or it is properly blocked and supported.
Never use damaged or insufficient wire ropes, sling or chains. Always wear gloves when handling wire ropes.
Never reach into bore during attachment installation or removal. Never align bores with your fingers or hands. Use proper alignment tools when installing, changing or servicing attachments.
Keep objects away from the radiator fan. Rotating fans will swirl and throw out objects, which can become very dangerous and cause severe injury to yourself and others.
Avoid contact with any components containing coolant. At or near operating temperature, the engine coolant is hot and under pressure and could cause severe burns.
Check the coolant level only after the radiator cap is cool enough to touch. Remove the radiator cap slowly to relieve pressure.
Do not allow your skin to come into contact with hot oil or components containing hot oil. At or near operating temperature, engine and hydraulic oil is hot and can be under pressure.
Always wear safety glasses and protective gloves when handling batteries. Keep sparks or open flames away!
Never permit anyone to hand guide the bucket or grapple into position.
When working in the engine area, make sure the top covers and side doors are properly secured or closed with the appropriate supports.

FIRE AND EXPLOSION PREVENTION

Always turn off the engine while refueling the excavator.
Never smoke or allow an open flame in refueling area or where batteries are being charged, or where batteries or flammable materials are stored.
Always start the engine as described in the Operation and Maintenance Manual. Check the electrical system regularly and frequently. All defects, such as loose connections, burnt out fuses and bulbs, burnt or damaged cables must be repaired immediately by an electrician or especially trained personnel.
Never store flammable fluids on the machine except in storage tanks intended for the Excavator's operation.
Inspect all components, lines, tubes and hoses for oil and fuel leaks and/ or damage. Replace or repair any damaged components immediately. Any oil, which escapes from leaks, can easily cause a fire.
Be certain that all clamps, guards and heat shields are installed. These components prevent vibration, rubbing, chafing and heat build-up. Install tie wraps to fasten hoses and wires, as required.
Cold start ether is extremely flammable. Use ether only in ventilated areas and as directed. Never use it near heat sources or open flames, do not permit anybody to smoke.

MACHINE START UP SAFETY

Before excavator start up, perform a thorough walk around inspection. Visually inspect the excavator, look for loose bolts, cracks, wear, any leaks and any evidence of vandalism.
Never start or operate an unsafe excavator.
Report all defects to your foreman or supervisor and make sure they are corrected immediately.
Make sure all covers and doors are closed and locked and all warning decals are on the machine.
Make sure all windows, as well as inside and outside mirrors are clean, and secure all doors and windows to prevent any unintentional movement.
Be certain that the area surrounding the excavator is free of other personnel, and that no one is working on or under the excavator before starting the engine.
After entering the cab, adjust the operator's seat and controls, the inside and outside mirror, the armrests and fasten and adjust the seat belt. Be certain that all controls can be reached comfortably.
All noise protection devices on the machine must be functional during operation.

ENGINE START UP AND OPERATING SAFETY

Before start up, check if all indicator lights and instruments are functioning properly, place all controls in neutral position and tilt the safety lever up.
Before starting the engine, alert any nearby personnel that the excavator is being started by sounding the horn.
Start the machine only when seated in the operator's seat, and with the seat belt fastened (if installed).
If you have no other instructions, start the engine as outlined in the Operation and Maintenance Manual.
Tilt the safety lever down and check all indicators, gauges, warning devices and controls for their proper indication.
Start and operate the engine only in a well ventilated area. If necessary, opening door and window. Warm up the engine and hydraulic system to operating temperatures. Low engine and hydraulic oil temperatures can cause the excavator to be unresponsive.
Check that all attachment functions are operating properly.
Move the excavator slowly into an open area and check all travel functions for their proper operation, check travel and swing brakes, the steering function as well as the turn signals and lights.

MACHINE OPERATING SAFETY

Familiarize yourself with job site rules. Be informed about traffic and hand signals and safety signs. Ask who is responsible for signaling. Check your surrounding for any obstacles in the working and movement range, check the load carrying capacity of the terrain, and secure the job site to shield it from any jam traffic.
Always keep a safe distance from overhangs, walls, drop offs, and unstable ground.

Be alert of changing weather conditions, bad or insufficient visibility and of changing ground conditions.
Be alert for utility line, check the location of underground cables, gas and water lines, and work especially careful in that vicinity. If necessary and/or if required, call local authorities to mark the location.
Keep sufficient distance to electrical lines. When working in the vicinity of high voltage electrical lines, keep proper distance to assure that the attachment does not come close to the lines.
DANGER! You must inform yourself about safe distance.
In case you do touch a high voltage line by accident, proceed as follows:
Do not leave the machine,
Move the machine, if possible, from the danger zone until you obtain sufficient distance,
Warn any personnel in the vicinity not to come close to the excavator and not to touch it,
Instruct or initiate that someone turns off the voltage.
Do not leave the machine until you are absolutely sure that voltage in the line, which had been touched or damaged, has been turned off!
Before moving the machine, make sure that the attachments and equipment are secured properly to avoid accidents.
When traveling on public roads or highways, make sure to observe traffic regulations, and make sure that the machine meets federal and local public highway standards.
Always turn on the lights if visibility is bad or if you are still working during dusk.
Never allow other personnel on the excavator.
Report any problems or needs repairs to your foreman or supervisor and make sure they are corrected immediately.
Do not move the excavator until you are certain that surrounding area is safe.
On machines without negative brakes check the brake system before starting to work, as outlined in the **Operation Maintenance Manual.**
Never leave the operator's seat while the machines are still moving.
Never leave the machine unattended, with the engine running.
When moving the excavator, keep the upper-carriage in lengthwise direction and keep the load as close as possible to the ground.
Prevent any working movements, which could tip the machine over. If the excavator begins to tip or slip on a grade, immediately lower the attachment and load to the ground and turn the Excavator facing downhill. If possible, always operate the excavator with the attachment positioned uphill or downhill, never sideways.
Always travel slowly on rough or slippery ground and on slopes.
Always travel downhill at permissible speed, so you don't loose control over the machine. The engine must run at nominal speed, use only the foot pedals to brake and slow down the machine.
Never shift during down hill travel, always shift to a lower gear before traveling downhill.
Never load over an occupied truck. Request that the driver leave the cab, even if a rock protection is installed.
If operating in visually obstructed terrain or whenever necessary, have another person guide you. Always have only one person signal you.
For demolition work, clearing, crane operation, etc. always use the appropriate protection

device designed for this specific application.
Allow only experienced persons to attach loads or to guide operators. The guide must be visible by the operator and/or must be in voice contact with him.
Depending on the attachment combination, it is possible for the bucket teeth to hit the cab, the cab protection or the boom cylinders. Be very careful when the bucket teeth get in this range to prevent any damage.

MACHINE PARKING SAFTY

Park the excavator only firm and level ground.
If it is becomes necessary to park the machine on a grade, properly block and secure it with wedges.
Lock the upper-carriage with the lock pin.
Lower the attachments to the ground and anchor the bucket lightly in the ground.
Bring all operating levers in neutral position and engage the travel and swing brakes.
Turn the engine off as outlined in the **Operation and Maintenance Manual** and raise the safety lever before you leave the operator's seat.
Lock the machine, remove all keys and secure the excavator against vandalism and unauthorized use.

MACHINE TRANSPORTATION SAFETY

Use only suitable transporting and lifting devices with sufficient capacity.
Park the machine on the firm and level ground and block the chains.
If necessary, remove the working device during transport.
When loading the machine on a flatbed trailer or railroad car, be sure that the loading ramp incline is less than 30° and covered with wooden planks to prevent skidding.
Remove all mud, snow or ice from track components before moving up the ramp.
Before loading, secure the upper-carriage with the under- carriage with the lock pin.
Align the machine with the loading ramp.
Attach the manual control levers to the foot pedals for sensitive control.
Have another person guide and signal the operator.
Have blocks or wedges ready to block the machine, if necessary, to prevent the machine from rolling backwards.
Retract the working device as far as possible and lower the working device as close as possible to the loading surface and carefully drive up the ramp and onto the flat bed trailer.
When the Excavator is on the trailer, release the upper-carriage lock pin, turn the upper-carriage back and lower the working device. If the backhoe working device is attached, tilt the stick and bucket in and relock the upper-carriage.
Carefully secure the upper-carriage and other parts with chains, wedges and blocks to prevent slipping.
Release the hydraulic pressure, remove the ignition key, raise the safety lever, close and lock the cab and close and secure all other doors and leave the machine.
Carefully check out the transport route. Make sure that width, height and weight allowances are within the permitted limits. Check that there is enough clearance underneath all bridges,

underpasses, utility lines, and in tunnels.
During the unloading procedure, proceed with the same care and caution as during the loading procedure. Remove all chains and wedges. Start the engine as outlined in the Operation and Maintenance Manual. Carefully drive off the loading platform. Keep the working device as close as possible to the ground level. Have another person guide and signal you.

MACHINE TOWING SAFETY

Only tow the Excavator if absolutely necessary and the towing should be done by the driver.
Be sure all towing and pulling device such as cables, hooks and couplers are safe and adequate.
Make sure that the cable or the towing rod are strong enough and are routed to the towing hook. Be aware that any damage to the machine caused by towing is never covered by Shandong Rhinoceros Engineering Machinery Co.,Ltd.
Never allow anyone to stand near the cable when pulling or towing the Excavator.
Keep the cable tight and free of kinks.
Engage travel slowly, and do not jerk. With a slack cable, the sudden impact of the load being towed could snap and break.
During the towing procedure, keep within the required transport position, permissible speed and distance.
After the towing procedure is completed, return the machine to its previous state.

MACHINE MAINTENANCE SAFETY

The machine may not be made unsafe when performing maintenance work. Never attempt maintenance procedures or repairs you do not understand.
Check the Operation & Maintenance Manual for service and maintenance intervals. Make sure you use only appropriate tools for all maintenance work.
During maintenance, do not allow unauthorized personnel to enter the maintenance are.
Before any maintenance work and especially when working under the machine, make sure a “Do not operate” tag is attached to the starter switch and remove the ignition key.
Use only nonflammable cleaning fluids to clean the machine.
Any welding, torch or grinding work on the machine must be explicitly authorized. Written authorization is necessary for welding on carrying structures. Before any using a welder, torch or grinder, clean off any dust and dirt and remove any flammable materials from the surrounding area. Make sure the area is sufficiently ventilated.
Observe all product safety guidelines when handling oils, grease, and other chemical substances.
When using hot service fluids, be very careful. They can cause severe burns and injury!
Never try to lift heavy parts. Use appropriate lifting devices with sufficient load carrying capacity. When replacing or repairing parts or components, make sure they are mounted very carefully on lifting devices, to prevent any possible danger. Use only suitable and technically sound lifting devices make sure that lifting tackle, wire cables, etc. has adequate load carrying

capacity.
Never position yourself, walk or work underneath suspended loads.
Never use damaged lifting devices or devices which are not sufficient to carry the load. Always wear gloves when handling wire cables.
Ask only experienced personnel to attach loads and guide and signal the crane operator. The guide must be within the visibility range of the operator and /or must be in direct voice contact with the operator.
When working overhead, use appropriate and safe ladders, scaffolding or other working platforms designated for this purpose.
When working high above ground, make sure you are fitted with ropes and appropriate safety devices which will prevent a possible fall.
Always keep handles, steps, railings, platforms and ladders free of dirt, snow and ice.
When working on the attachments, makes sure the attachment is supported properly. Never use metal on metal support.
Never work underneath the machine if it is raised or propped up with the attachment. The undercarriage must be supported with wooden blocks and supports.
If it is necessary to repair the track, block the chain with wedges and lock the upper-carriage.
Fluid escaping from a small hole can have enough force to penetrate the skin. So never check for leaks with your bare hands, always wear gloves or make indirect check by other instruments.
If it is necessary that the machine must be repaired on a grade, block the chains with wedges and secure the upper-carriage to the undercarriage with the lock pin.
Never loosen or remove lines or fitting before the working device has been lowered to the ground and the engine has been turned off. Then turn the ignition key to contact position, move all servo controls (hand-control lever and foot pedals) in both direction to release pressures. Then release the tank pressure as outlined in this Operation and Maintenance Manual.
Always disconnect the battery cable before working on the electrical system or before any arc welding on the machine. Always disconnect the negative cable first and reconnect it last.

HYDRAULIC LINES AND HOSES

All the hoses, lines and fittings must be checked regularly. It is better to check before start, to check monthly, to check annually for leaks and any externally visible damage! Any damaged sections must be replaced immediately! Escaping oil can cause injuries and fires!
Even if hoses and lines are stored and used properly, they undergo a natural aging process. For that reason, their service life is limited.
Improper storage, mechanical damage and improper use are the most frequent causes of hose failures.
The service life of a hose may not exceed six years; including a storage period of not more than two years (always check the manufacturer’s date on the hoses).
Using hoses and lines close to the limit ranges of permitted use can shorten the service life (for example at high temperatures, frequent working cycles, etc.).
Hoses and lines must be replaced if any of the following points are found during an

inspection:
-- Damage on the external layer into the inner layer (such as chaffing, cuts and rips)
-- Brittleness of the outer layer and
-- Changes in shape.
-- Corrosion on fittings, Crack, wear and squeeze.
-- Storage or service life has been exceeded.
When replacing hoses or lines, always use the original parts of Shandong Rhinoceros Engineering Machinery Co.,Ltd.

ADDITIONAL SAFETY GUIDELINE FOR CABIN

When entering into the cabin and before operating the Excavator, please read the following safety instruction carefully.
Keep ladders, footsteps, handles and handrail in clean condition and always free them from mud, oil, grease, ice, snow or any other obstacles.
To guarantee an easy opening of the cab door in all weather conditions, coat the rubber seals around the door with silicon oil or talcum every two months and more often if necessary.
Regularly grease the hinges and lock of the cab door as well the fixing device of the door in opened position.
During maintenance works, always wear safety glasses and proper protective clothes.
To climb up or down the cab, the Excavator must be parked on firm, flat and level ground.
Face the Excavator when climbing up the cabin and always hold on to the machine at three points.
As soon as you can reach the handle of the door with your free hand unlock and open the door before climbing up any more.
Keep and guide the doors all the way with your hand and lock it in its opened position, making sure it is securely fixed in this position, so it cannot be slammed by the wind.
Some external influences, and especially the wind, may make the opening of the door uneasy.
Sit down on the seat, fast your seat belt and start the machine.
It is essential to have your seat belt fastened if you want to operate the machine with the cab door open. Should the belt be missing on your machine, so you must get one installed before you start working with opened cab door.
Be aware of difficult weather conditions and their possible consequences. For example, the wind could slam the cab door.
Before sitting down on the seat, you must make sure the machine is parked on a flat, firm and level ground.

SIGNS ON THE HYDRAULIC EXCAVATOR

Your hydraulic excavator has several kinds of signs.
Warning Signs: Warn accident risks with potentially serious or fatal injuries.
Notice: Indicate specific points of control, maintenance and properties of the excavator.
Identification Tags: Indicates the original and other details.
Keep these signs clean. If it is missing or damaged, paste or replace a new one.

Other signs should be treated as the same as the above mentioned.

1. **Warning Sign on hydraulic oil tank:** To avoid being scalded.

> **Caution**
>
> 1. Turn off the Engine before open the cover.
> 2. Don't open the cover when the oil temperature is high.
> 3. Open the cover slowly to release the inner pressure.
> 4. Don't loose the displacement plug when the oil temperature is high.

2. **Warning Sign on fuel tank:** Warn to use the designated fuel.

> **Fuel**
>
> 1. Release the water in the fuel tank after 50 working hours and use the designated fuel according to the Operation & Maintenance Manual.

3. **Warning Sign:** To keep space from the stick.
4. **Identification Tags:** Indicates the Model, Manufacturer, Operating Weight, Date of EXW, and the Series No.
5. **Reminding Tags:** Remind the driver to read **Operation & Maintenance Manual** and other Cautions before operating the Excavator.
6. **Warning Sign on Water tank:** To avoid being scalded.
7. **Safety Warning:** Cautions when the Engine turning on.
8. **No Entering Warning:** Entering into the swing area is strictly prohibited.

Ⅲ OPERATION AND CONTROL

“OPERATION AND CONTROL” contains the following items.

1. Position of each parts
2. Cab
3. Instrument panel
4. Appliance board
5. Air conditioner system
6. Sound system
7. Adjustment of seat
8. Safe belt
9. Front glass
10. Control bar of door
11. Inside lights of the cab

▲WARNING

Warning light, buzzer or each light on the appliance board go on or sound worn, please cut off the power, clear the faults

PARTS POSITION

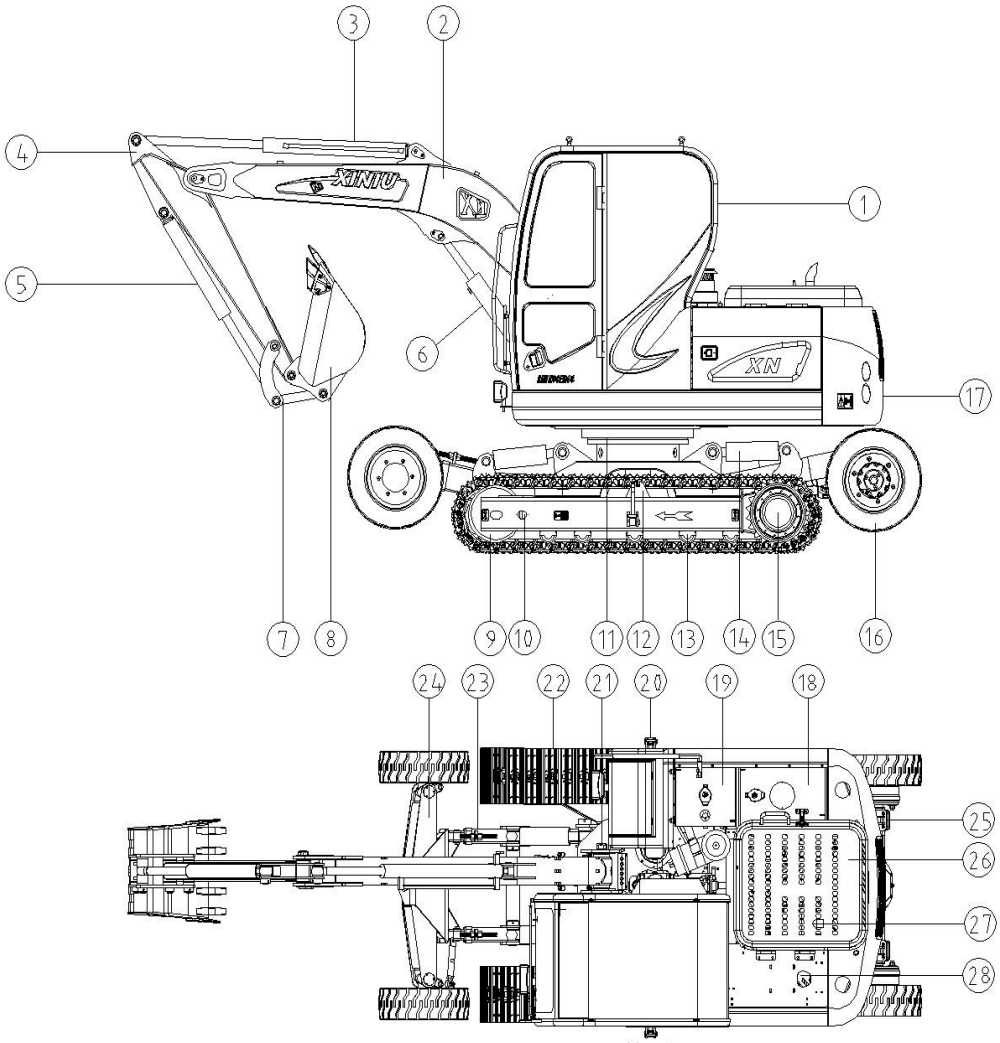

图2-1

1、驾驶室	8、铲斗	15、行走马达	22、链板
2、动臂	9、导向轮	16、轮胎	23、支撑架
3、斗杆缸	10、涨紧装置	17、配重	24、前摇摆架
4、斗杆	11、回转装置	18、液压油箱	25、后摇摆架
5、铲斗缸	12、链轮	19、燃油箱	26、发动机机罩
6、动臂缸	13、支重轮	20、挂钩	27、发动机
7、连杆结构	14、转换行驶油缸	21、支架连接结构	28、散热器总成

1. cabin	8. bucket	15. travelling motor	22. track plate
2. boom	9. guide pulley	16. tires	23. support device
3. bucket arm cylinder	10. tensioning device	17. counter balance	24. front axle
4. bucket arm	11. swing device	18. hydraulic oil tank	25. rear axle
5. bucket cylinder	12. chain wheel	19. fuel tank	26. engine hood
6. boom cylinder	13. thrust wheel	20. hook	27. engine
7. connecting structure	14. travelling transfer cylinder	21. connecting device	28. radiator assembly

Cab

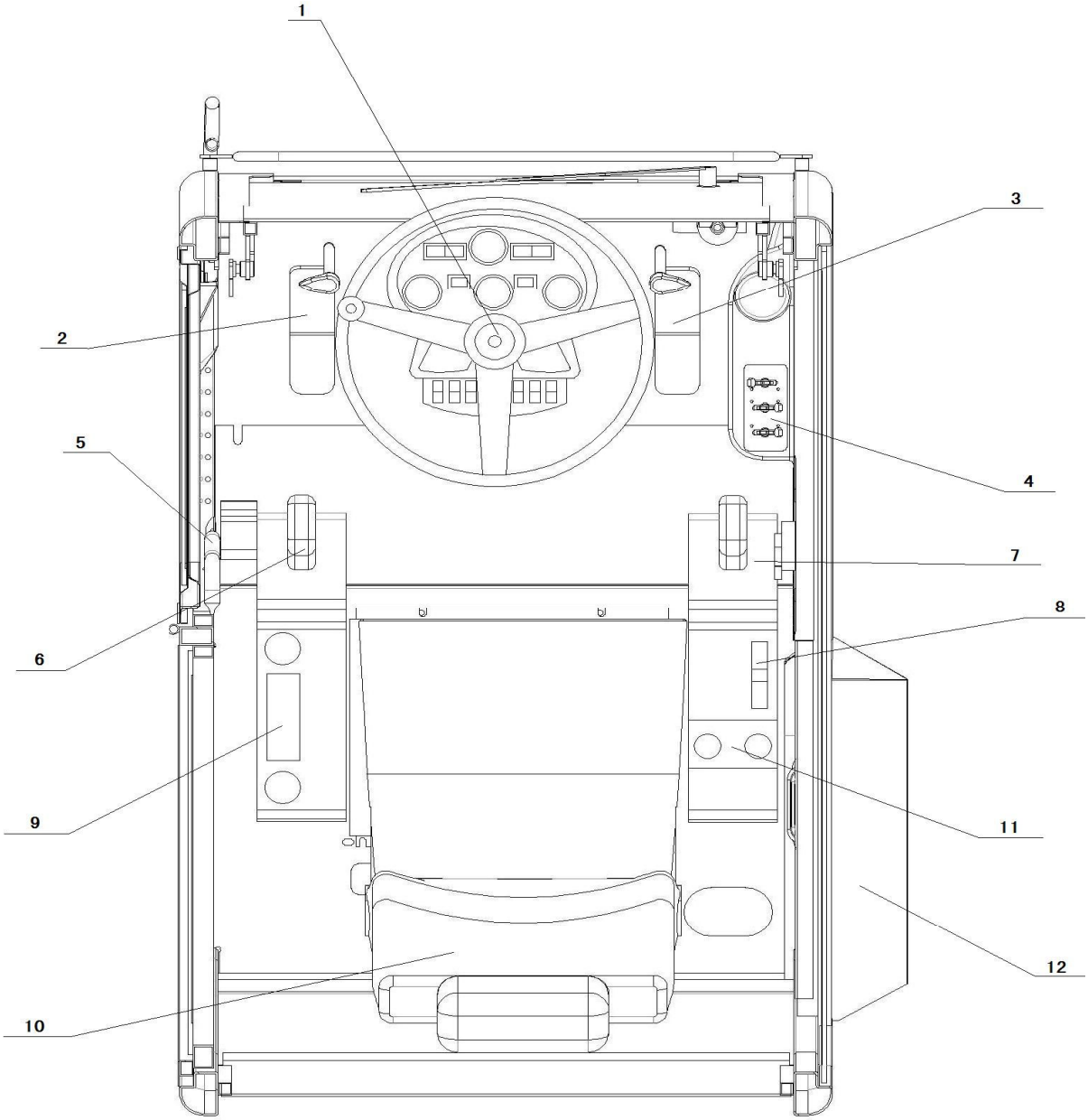

Pic 2—2

1. sweering device 5. safety lock 9. radio
2. travelling valve pedal(left) 6. control pole (left) 10. seat
3. travelling valve pedal(right) 7. control pole (right)
4. control botton 8. travelling mode controller
11. AC control pedal 12. gear panel

1. Instrument Panel

Pic2-3

Pic 2-3

2. Starting Switch

Start and stop the engine. Pic 2-4

A. "On" Position—Turn to this position, electric system on, the charging and engine oil pressure lights on

B. "Off" Position—Turn to this position, the engine off, electric system power off.

C. "Switch On" Position—Turn to this position to start the engine.

After release, the key will return to "on" position automatically. To protect the engine, do not stay on "Switch On" Position for more than 15 seconds.

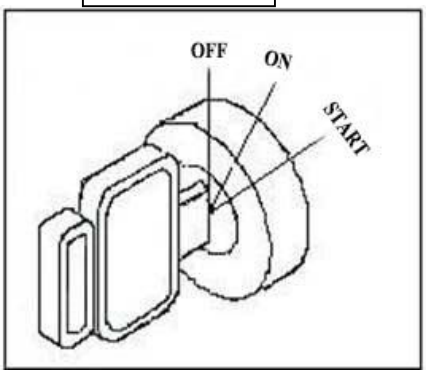

Pic 2-4

3. Horn Switch (Right Joystick)

To blare the horn, press the button on the right joystick. Pic 2-5

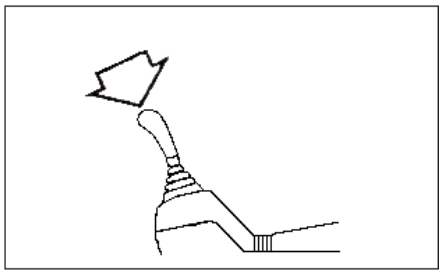

Pic 2-5

4. AC control panel

a、AC Switch (Pic 2-6 Right Switch)

Clockwise rotate the AC switch when engine on, the AC system will start.

Turn back to OFF position, AC system will stop.

b、Fan Speed Switch (Pic2-6 Left Switch)

Fan Speed Switch is to control the air flow rate, there are 3 grades, on O position, the fan will stop.

Position L: Low Blowing Rate

Position M: Middle Blowing Rate

Position H: High Blowing Rate

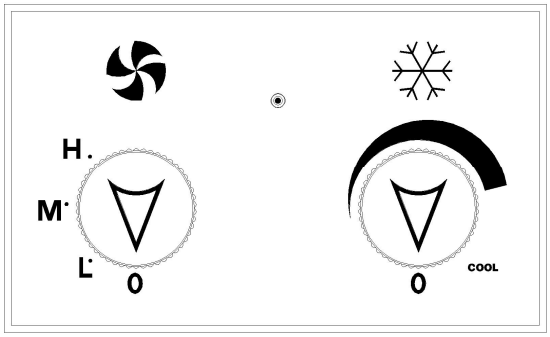

Pic 2-6

5. Left Joy Stick (With hydraulic hammer switch)

To control the machine swing and bucket arm movement. The Switch on left joy stick is

to control the hydraulic hammer.

6. Right joystick (with horn switch)

The joystick control the movement of boom and bucket, press the button on the top of the joystick, the horn blares.

7. Hand throttle Control Pic 2-7

To control the engine speed.

A：Low Speed：Backward, lower the engine speed

B：High Speed：Forward, raise the engine speed

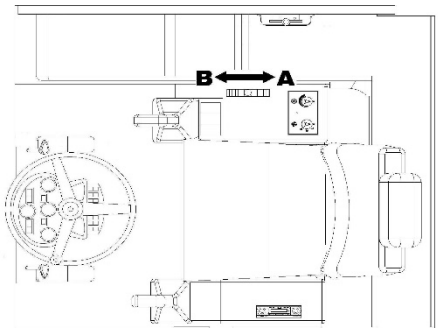

Pic2－7

8. Dozer Plate Joystick

On the right side of the seat

A: Draw back the joystick, raise the dozer plate

B: Push the joystick, lower the dozer plate

9 and 10. Traveling Joystick (Left and Right Side)

To move the excavator forward and backward. One joystick one side crawler.

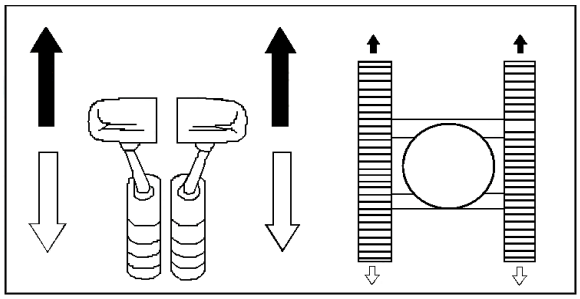

Pic 2-8

11. Safety pole ①

To lock the joystick

12. Radio

Pic2-16“Radio”

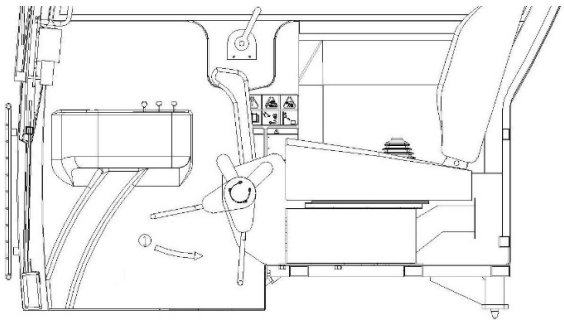

Pic 2-9

Instrument panel

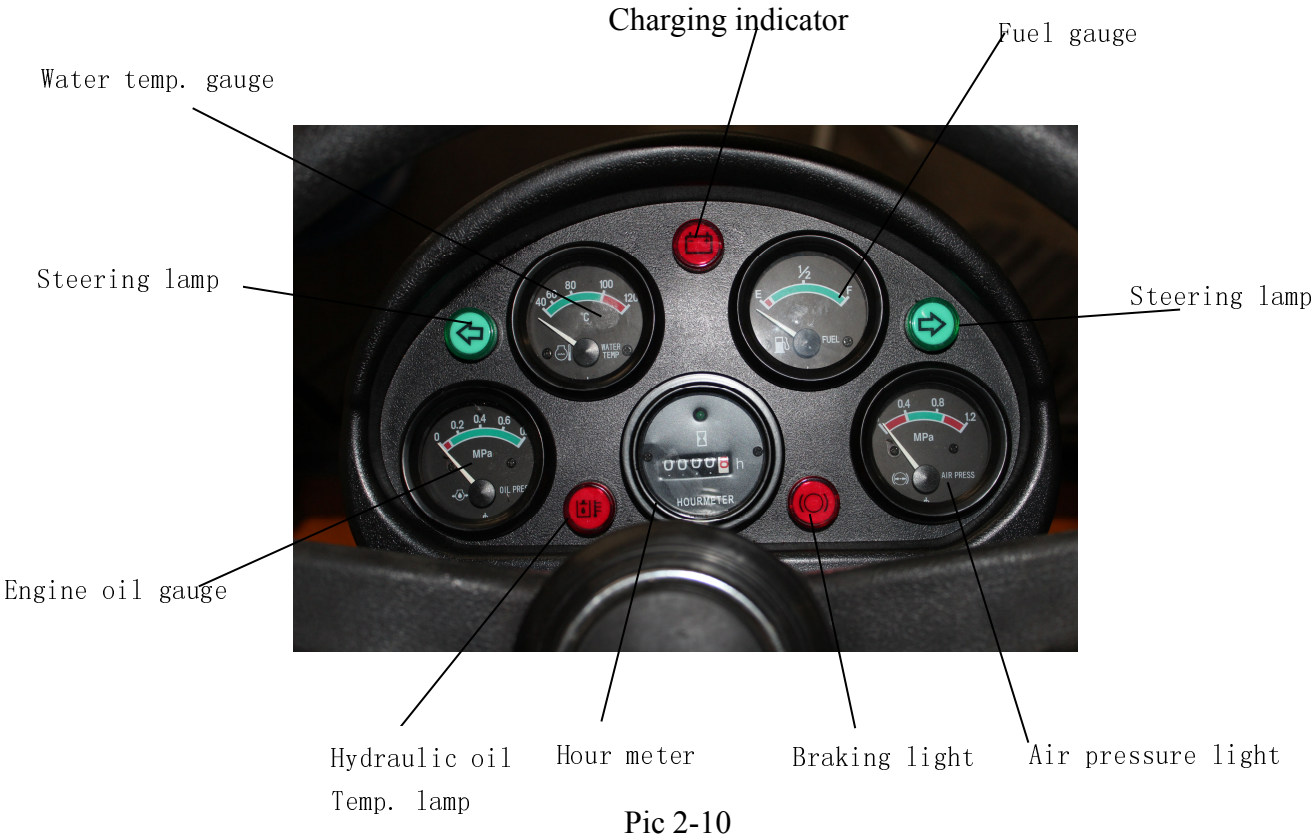

Pic 2-10

1、 Instrument Panel mainly includes water temperature gauge, fuel level gauge, engine oil indicator, air pressure , brake, steering , hydraulic oil gauge and charge button and etc.

2、 Water Temperature Gauge : When water temperature between 40-106 ℃ ,the indicator in the green area, if temperature is above 106℃, the indicator will rise to the red area and the buzzer will blare, press the mute button, the buzzer will stop blaring,

3、Fuel Level Indicator : When the fuel oil level is above 10% of the oil tank, indicator in the green area. If the fuel level is below 10% of the fuel tank, indicator will be shown in the LCD red area, and the buzzer will blare, press the mute button, the buzzer will stop.

4、Charge indicator：Shows the condition of the generator. When generator not working，LED light blinks，if the engine oil in the normal level, the buzzer blares，otherwise not. Press the mute button to stop the buzzer.

5、Engine Oil indicator：When engine oil pressure below 0.05Mpa , the red light will blink. If charging， the buzzer will blare， otherwise not. (If pressure above 0.05MPa , it is beyond

limits and will shut down)

6、Braking Indicator: To show the abrasion of the brake disc. Ordinarily the light is off. But when any problem or excessive abrasion with the brake， the indicator light will be on. After repair, the light off.

7、Steering Indicator: To show the direction of the turning signal. Ordinarily off. When making the turning signal, it will show the direction accordingly. When signal off, indicator off.

8、Hydraulic Oil Indicator: ows the level gage of hydraulic oil and warns accordingly， normally off. When low level， it will warn。

9、Air pressure indicator: r pressure below 0.4Mpa, red light will blink and warn. If charging without warning, the buzzer will blare, otherwise not.

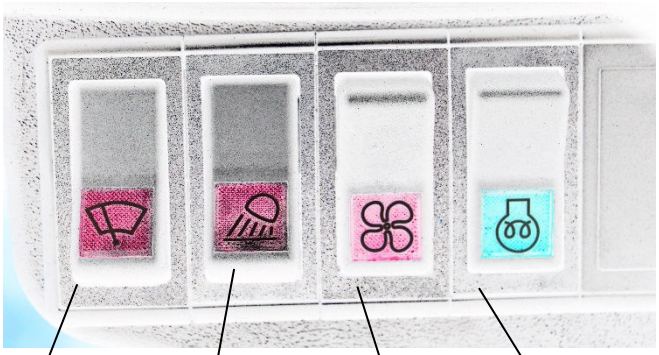

Windshield Wiper　Working Headlights　Fan　Preheat

1、Working headlights: Press the button , this indicator on and headlights on. If this indicator off, the headlights off.

2、 Windshield Wiper: Press the button , if the indicator shows the wiper is on high speed , it will turn to low speed. Vice versa. If the indicator shows the wiper not on zero point , press the button, the wiper will stop and return to zero point.

▲Warning
If the front glass is dry, please spray water first, then turn on the windshield wiper, otherwise it may damage the glass or the wiper. If some sand or dirt on the glass, please clean the sand or dirt first, then turn on the windshield wiper, otherwise it may damage the glass or the wiper. If no windscreen liquid left, do not start the wiper , otherwise it will damage the motor of the wiper. Do not use soapy water or other liquids except windscreen liquid, it will damage the wiper.

Keyset

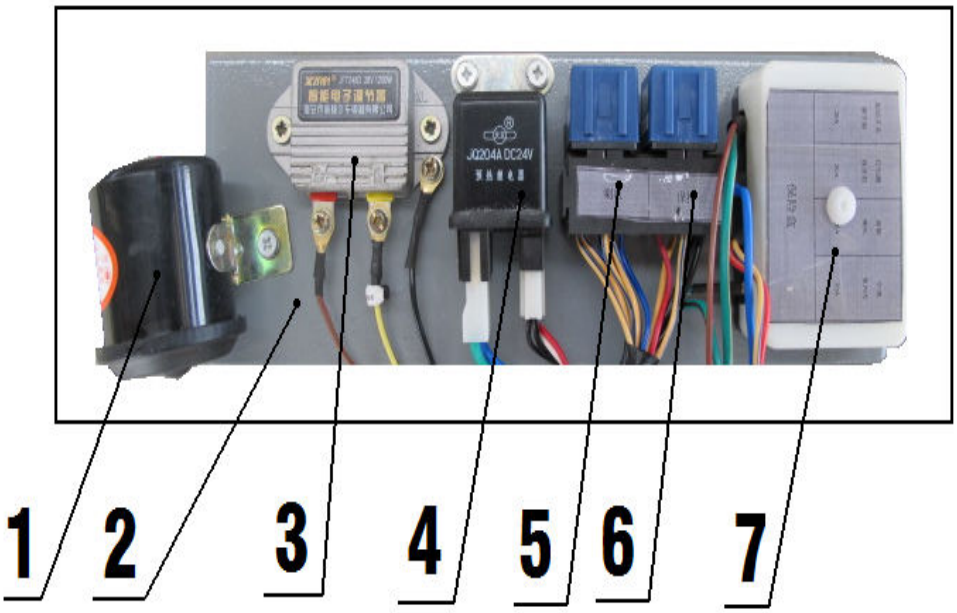

Pic 2-11

1.Buzzer 2.Key Set 3.Electronic Regulator

4.Compound Relay 5.Horn Relay 6.Head Light Relay

7.Fuse Block

1. Buzzer: When the electric switch is on, the alarm relay is connected with the buzzer and output the control signal. The buzzer will blare to warn the electric system failure, now the machine should be stopped and checked, and clear all the errors.

2. Keyset: It is used to install the relays and fuse block. A key connection between the electric systems.

3. Intelligent Electronic regulator: It controls the electronic system to insure the charging system and the machine voltage. The electronic regulator output the control signal to ensure the electric system works well.

4. Starting compound relay: To control the starting motor on the engine. When the starting switch is on “Switch On” position, this compound relay will supply power to start the motor. At the same time, it collects all the signals from generator to make sure every parts work well. If engine neutral point has voltage signal, the starting replay will shut down.

5. Horn relay: When press the horn button on the joystick, signal will be transferred to horn relay, then the horn will be connected and start to blare.

6. Head light relay: To control the headlights, press the headlights button, headlight indicator on , then the headlight relay and the headlights will be connected. Vise versa.

7. Fuse block: It contains all the fuses of this machine, all the power output is insured by this device.

Warnings

This electronic observation system needs to collect the simulation and switch signal, and control the electric device through the sensitive switch. So it's necessary to check the connections between the sensors and devices, to insure all the signals are correct and effective.

To prolong the lifetime of the electric devices, do not wash this observation system directly by water when clean the excavator.

AC SYSTEM

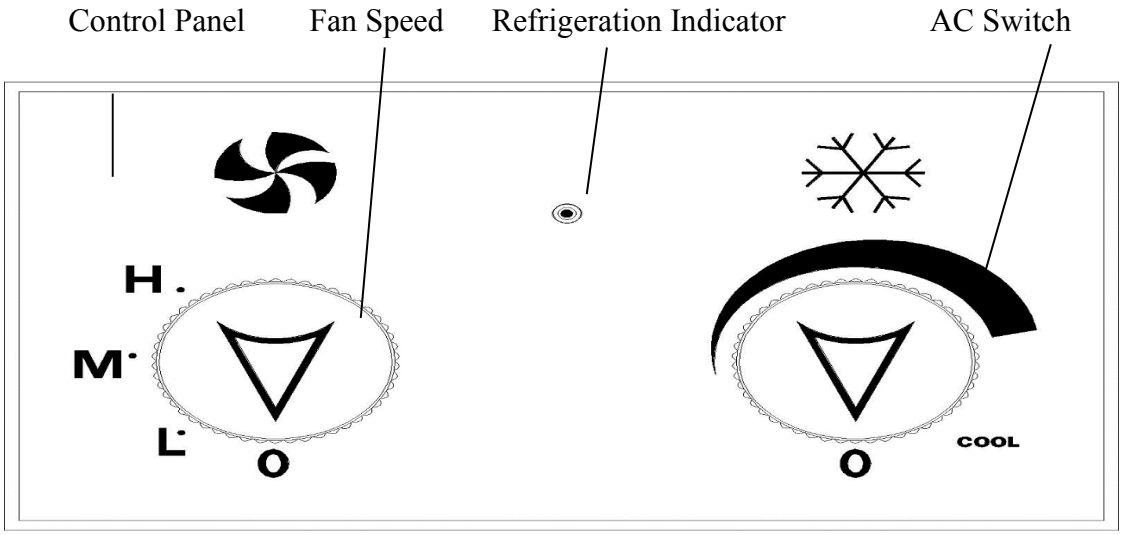

Pic2-12

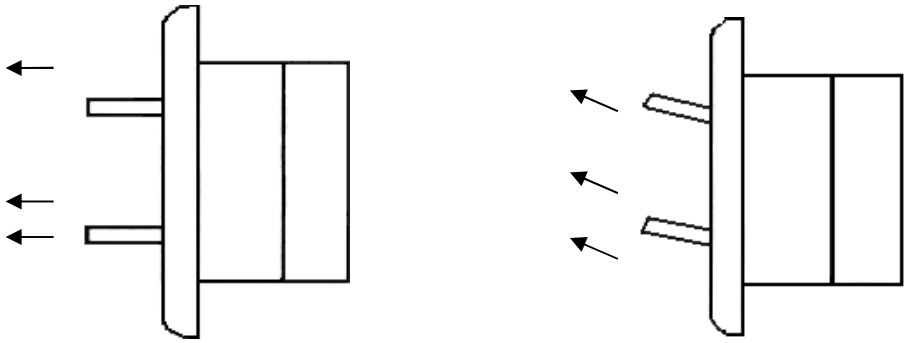

Pic2-13

Ventilation Basic Operation

Pic 2—12，turn the AC switch anticlockwise to 0 point；

Pic 2—12，turn the Fan Speed Switch to L M H accordingly. Which means Low Middle High air flow rate.

Pic 2—13， rotate the air outlet to suitable position , which can select appropriate air direction.

Pic 2—12，turn the Fan Speed Switch to O point to stop the fan.。

Refrigeration Basic Operation

Choose suitable fan speed and air direction according to the Ventilation Basic Operation.

Pic 2-12, turn the AC switch (clockwise lower temperature, anticlockwise higher temperature). Turn the Fan Speed Switch to change the air flow rate.

Adjust the air speed, direction and temperature accordingly.

Notes*：If the weather is not very hot，after start the AC for a while, you may feel cold. Then you should follow the procedures below:

Turn the AC switch anticlockwise to high temperature , if still feel cold, turn the Fan Speed Switch anticlockwise to lower air speed.

Pic 2-12， turn the AC switch anticlockwise to O point , and turn Fan Speed Switch anticlockwise to shut down the AC system.

Heating System Operation

Open the Hot Water Valve, and follow the ventilation basic operation.

Notes：

1、If the AC system has the dust gauze , clean the dust gauze regularly once a month. Otherwise the dust or dirt may block the dust gauze, then the air circulation can not pass the heat exchanger smoothly, which will affect the efficiency of the AC system.

2、Close the Hot Water Valve first when use the AC in summer or use the ventilation system in spring and autumn.

Open the Hot Water Valve and turn the AC switch to O point first before use heating system in winter.

3、Warm water core is connected with the engine water tank, once water leakage occurs in the warm water core, the engine will overheat. It’s important to protect the warm water core from frost cracking. To prevent the cooling fluid freezing or water core/water tank frost cracking, please do use the cooling fluid we authorized. If do not use the machine for a long time, it’s necessary to drain the cooling fluid out if in cold winter. Warning: The warm water core frost cracking is not included in the after sale service.

4、The refrigerant can frostbite the skin very easily, especially the eyes. Furthermore, refrigerant emits toxic gas in case of fire. When disassembly the cooling system, insure the refrigerant will not spray to the skin or eyes. Recycle or drain the refrigerant first , then disassembly the system. During the entire process , no fire allowed.

5、If do not use the Refrigeration System for long time , turn on the Refrigeration System every 15 days , each time 5 to 10 minutes.

Sound System

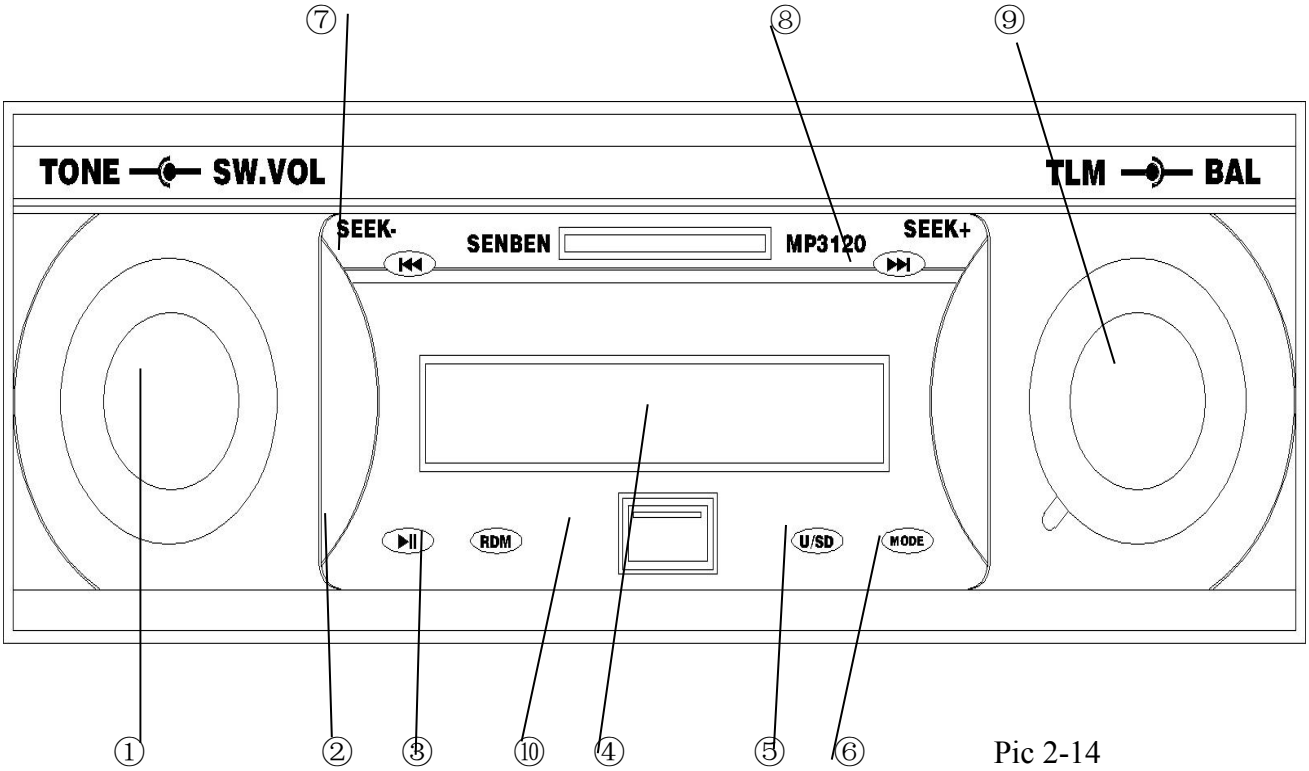

Pic 2-14

1. Controller and Switch

①ON/FF＆Volume＆Balance　　②Pause/Play

③Random　　④Digital LCD

⑤Switch　　⑥Mode

⑦ Former　　⑧ Next

⑨ FM/AM　　⑩USB

2. FM Radio adjustment.

1) Turn the ON/OFF switch right.

①Open the radio，the FM channel number will be shown on the digital LCD screen ④

·Turn the ON/OFF/Volume switch to left/right to decrease/increase the volume.

·Turn the Audio Mode switch to change the audio mode.

·Turn the ON/OFF switch ① to change the balance between the left and right ear channels.

2)Turn the FM channel manually：

·Press the FM/AM switch⑨ , to choose the FM/AM channel.

·Turn the switch④ to choose the channel manually.

3．Presetting the FM/AM channel

1)Press the ON/OFF switch① to open the radio，the channel number will be shown on the LCD screen.

2)Turn the switch④ to select the channel. Press the Memory button， words “ME” will blink on the screen, then press button⑥(The presetting number of the channel will be shown on the low right corner of the LCD screen),then the channel selected will be saved in the Memory Button.

3)When press the button⑥, the sound will disappear. After the presetting finished, the FM/AM channel and no. will be shown.

·After the FM channel presetting finished, then press the Presetting button⑥, the radio will turn to the channel selected.

Seat Adjustment

Lift up the adjusting rod on the left side of the seat, adjust the back of the chair to a suitable angle.

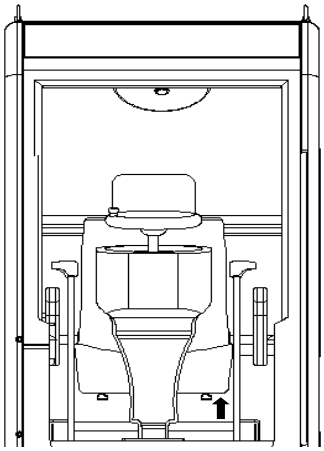

Pic 2-15

Front window

Open and close the front window.

1. Disconnect the electric wire of the wiper motor①.

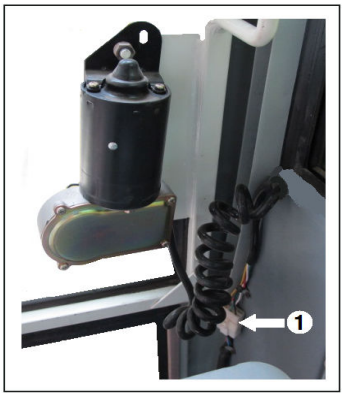

Pic 2-16

2. Loose the locking pins on both sides of the window on the top of the cab (Pic 2-17)

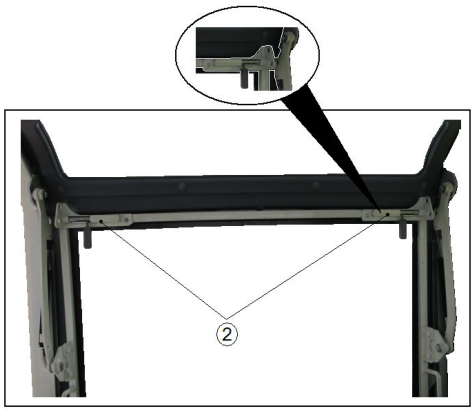

Pic 2-17

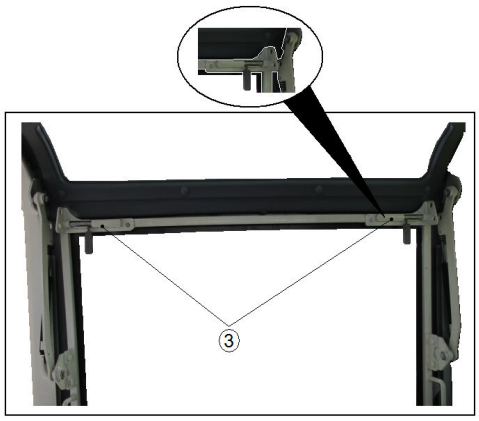

Pic 2-18

3．Lift and fixate the window with the two handles.

4．Screw up the two locking pins③ to insure the safety. (Pic2－18)

Note：Reverse the procedures to close the window.

Action Bar to open and close the door

Push the action bar as the indicated direction to open the lock. (Pic 2-19)

Pic 2-19

Interior lamp in the cab

Press the switch① to turn on the light.

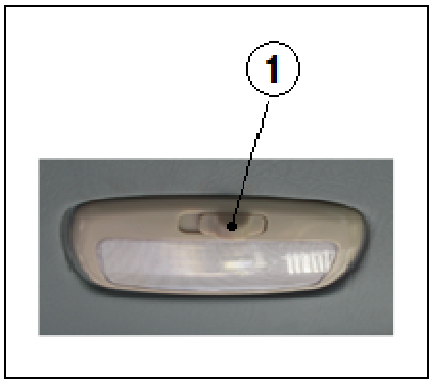

Pic 2-20

Warning
Keep the door locked when operating

OPERATING

New machine operating Instructions

All RHINOCEROS excavators have been checked and adjusted before out of factory, but in the initial running-in process, still need to follow below steps, otherwise it will damage the device and reduce performance.

Time	Load
Ahead 50 hours	Keep of 60%—70% of full load (Engine rotate speed：60%—70% rated speed)
After 50 hours	Full load

If the machine full load working before the run-in period, it will affect using life and safe operation, and eventually cause the malfunction.

NOTE：

l. Check if the coolant, engine oil and hydraulic oil leaks every day.

2. Check the lubricating oil every day, add the lubricating oil as needed.

3. When operating the machine, should pay more attention to the instrument board display and a variety of instruments.

4. To avoid engine overload.

5. Before the engine and other components reach operating temperature, maintained at 60% -70% of the load.

6. When the machine is working, check the working device is normal.

7. Check whether some parts loose or damaged in transport.

8. Check the wires or terminals if is loose, the instrument board is working, battery fluid is sufficient.

Lubricating fluid and filter

1. After 50 working hours, change the oil and oil filter.

2. After 100 working hours,cleaning the hydraulic line filter.

3. After 500 hours, change the running or reduction device gear oil.

NOTE: When changing the oil or grease, referring to this manual "Inspection and Maintenance".

Starting and stopping

Engine-checking before starting

⚠ WARNING
If there are combustibles such as paper and leaves on the high temperature parts, such as the air intake tube, muffler, it may cause fire, the leakage on the fuel and hydraulic tank may cause first too.

Check the following items before starting the engine:

1. Electrical system-check the wires and the connectors.
2. Fuel system-drain the water and impurity from the fuel tank.
2. Fuel system-drain the water and impurity from the fuel tank.
3. Hydraulic system-check the leakage of hydraulic oil tank and tubes.
4. Lubrication-carefully conduct daily and regularly maintenance according to the working hour gauge.
5. safe-check around the machine, makes sure there is no person under the machine, then starts to maintain.
6. Check all action bars and other parts.

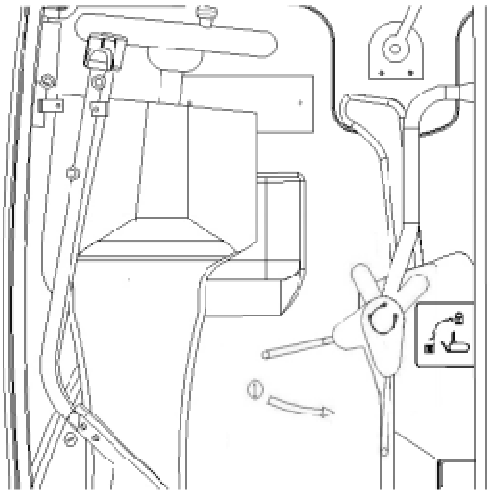

Pic3-1

Checking before starting

⚠ WARNING
Please put the safe bar on the lock position before leave the machine.

1. safe bar ① is on the “lock” position （Pic 3-1）
2. Checking the working and all conditions are normal.
3. make sure the traveling action bar①, dozer blade action bar ② in neutral position (Pic3-2).

   NOTE: do not touches any switch when start the engine.
4. Turn the switch to the “start” position

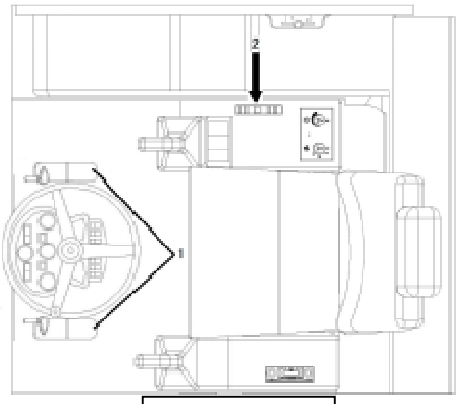

Pic 3-2

to check if all lights works, turn all other lights except the followings(Pic 3-3）

· engine cooling liquid temperature gauge

· charging warning light

· fuel gauge

· engine oil pressure warning light

NOTE: If all the lights do not work when power on, there must be somewhere wrong. The buzzer will warn for 2 seconds.

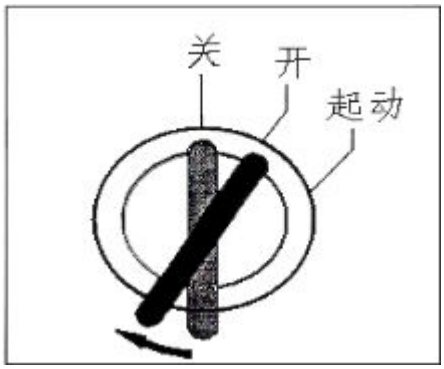

Pic 3-3

Engine starting

⚠ WARNING
Sound horn before starting; make sure there is no person or other thing in the working area

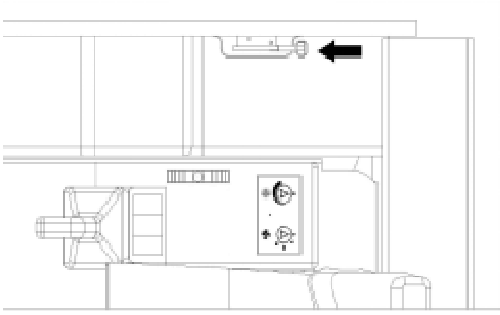

Pic 3-4

1. Check according to the procedures of engine before starting.
2. Put the accelerator handle on the level of a little higher than the idle speed (Pic3-4)
3. Sound horn
4. The engine should be started in 5s after turn the switch to “start” position (Pic3-5)

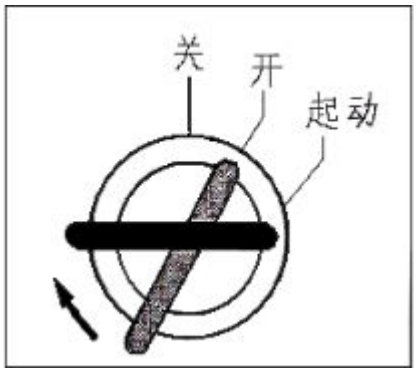

Pic3-5

⚠WARNING
If the engine do not started after 10s, turn the switch back to “off” position, start again after 5m.

5. The key will go back to “start” position automatically after the engine is started and loosen the key.(Pic3-6)

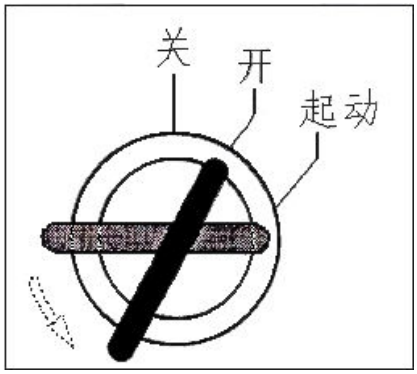

Pic3-6

6. Do the temperature warming up, up to hydarulic system warming up.(Pic3-7)

7. Check all the operating instructions after warming up,confirm the engine system(engine oil pressure,cooling liquid and so on) is on the normal working condition. If find problem, should stop the engine at once.

Pic3-7

Instrument panel indicator light	Indicator display
Coolant temperature gauge	Green area
Fuel gauge	Green area
Charging indicator light	no
Engine oil pressure indicator light	no
Preheat finish indicator light	no
Hydraulic greasy dirt warning indicator light	no
Air filter warning indicator light	no

8. Purging system checking

· no color or blue-engine works well

· black-combustion insufficiency, check reason

· white or deep blue-burning engine oil, check reason

Check engine vibration and noise, if there is noise and vibration, check the reason

NOTE: When the engine is start, the engine cooling liquid gauge show is red, do as follows: Stop work, make the engine speed to the low idle speed. Open the engine cover, for ventilation. When the engine temperature gauge return to the green area,turn off the engine. After engine cooling, check the cooling liquid level, look for leaks, blockage, cooling fins (heat emission hole) whether there is dirt covered, fan belt tensity is appropriate.

Starting on low temperature

⚠WARNING
When using preheating system, does not use starting fluid, it may cause explosion.

1. Check according to the procedures of engine before starting.
2. Put the accelerator handle on the level of a little higher than the idle speed
3. Sound horn
4. Turn the switch to “open” Position (Pic3-8) Wait 15 seconds, start immediately.
5. Turn the switch to “start” Position the engine will be start within 5 seconds. (Pic3-9)

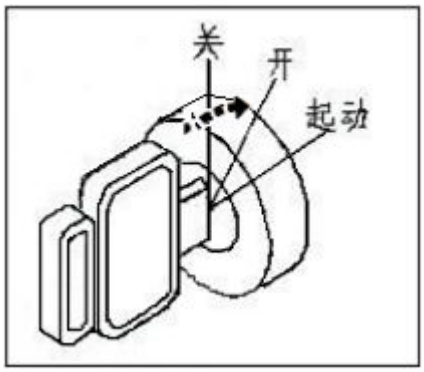

Pic3-8

⚠WARNING
If the engine crankshaft rotation at about 12 seconds does not start, giving up control to start, wait 5 minutes and repeat the above operations.

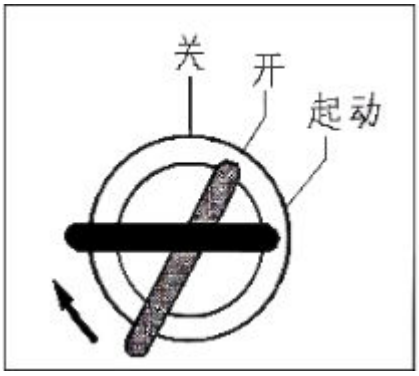

Pic3-9

6. The key will go back to “start” position automatically after the engine is started and loosen the key.
   - When the engine is running, do not turn the key to the "start" position; otherwise it will damage the engine.
   - If repeating the starting procedure, the engine still does not start, check the fuel wires and battery condition.

7. After starting the engine, check all operations indicator to make sure the engine system (engine oil pressure, cooling liquid, etc.) is in the normal working condition. If there is any problem, turn off the engine immediately.

8. Reference ”hydraulic system warming up-low temperature state”, do the warming up. Page 3-8.

Using Auxiliary boost battery to start the engine

⚠WARNING

1. Wear safe glasses
2. Do not connect positive and negative pole directly
3. Do not connect the earth wire of the auxiliary boost battery to the engine battery directly; find a connecting position on the machine. Pic3-10
4. The battery may produce hydrogen when discharged, it may cause explosive.
5. Pull up the machine on a dry area or on concrete ground, and then start the engine. Do not start on steel plate.

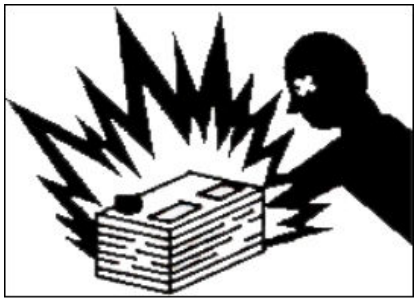

IMPORTANT

The electric system is 24V with the negative pole connecting to the ground, auxiliary starting use the same battery with 24V.

When start the engine, if the battery is discharged, using the auxiliary or boost battery start the engine

1. Using boost wire ①（Pic 3-11）connect the positive pole of the battery to the positive side of the discharged battery
2. Using boost wire ②（Pic 3-12）connect the negative side of auxiliary battery to the earth point of the upper platform, do not connect to the negative pole of the battery directly
3. Start the engine as instructed
4. After the engine is started, move the boost Wire from negative to positive pole.

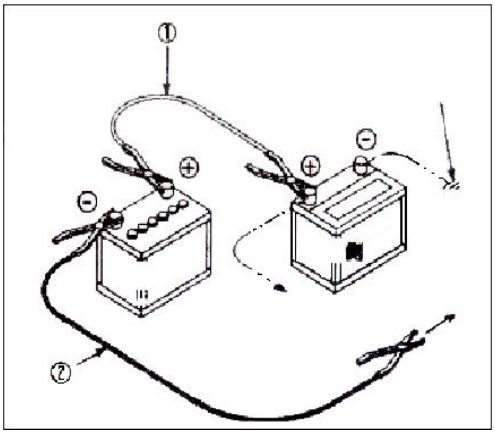

Pic 3-11/12

Preheating of hydraulic system

IMPORTANT
Stop the engine at once if there are some faults or misoperating, make sure the excavator reach normal temperature before working, especially in low temperature environment. the normal working temperature is 50－80℃(120－170F)

1. Running the engine in middle speed for 5 minutes without loading

2. Put the safe pole ① (Pic 3－13) “unlock” position

3. Slowly move cylinder of the boom, bucket arm and bucket for 5 times to let the hydraulic oil cycle without load in the hydraulic system.

4. Check the interval of working devices lift working devices then turn clockwise for 3 cycles then anticlockwise for 3 times.

5. Put the working device on ground to let one side of the track shoe off ground on a firm ground, the other side track shoe on ground, control the traveling motor forward and backward for two times, then check the other side track shoe in the same way.(Pic3-14)

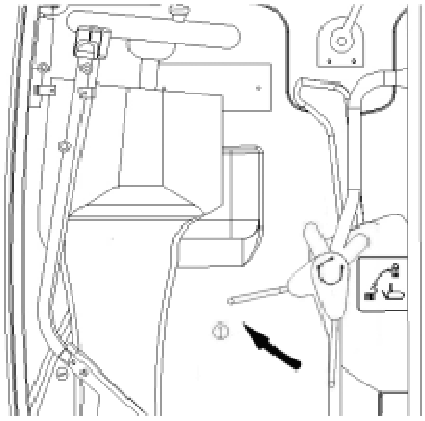

Pic3-13

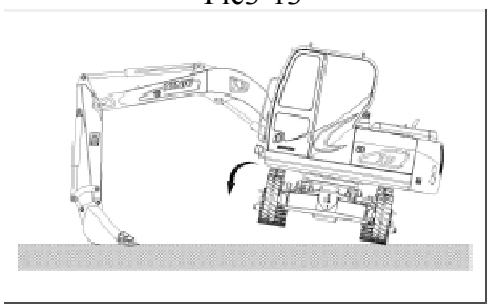

Pic3-14

Warming up of the hydraulic system in low temperature

1. Running the engine in idle speed without load for 5 minutes(Pic 3-15)。

2. Running the engine in middle speed without load for 5 minutes(Pic 3-16)

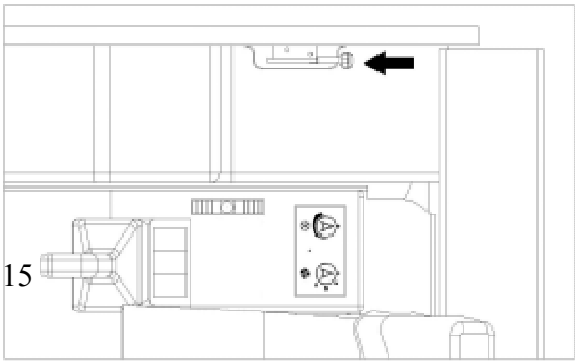

Pic3-15

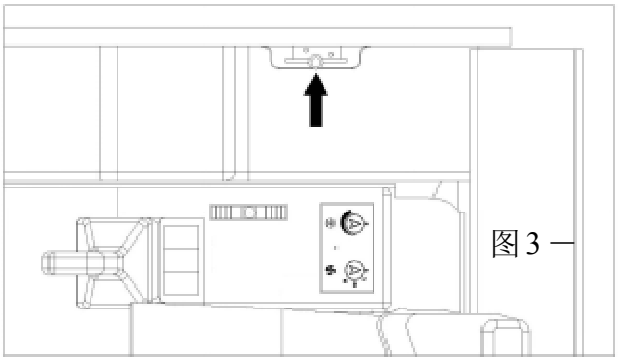

Pic3-16

3. Put the safe pole ①(Pic3-17/18) on “unlock” position to switch on the pilot oil

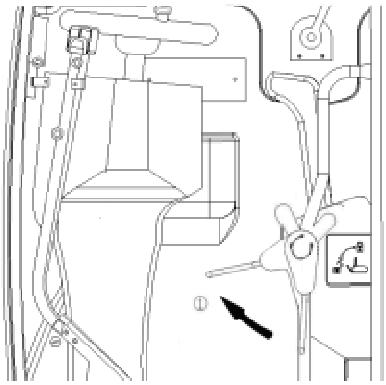

Pic3-17

4. Slowly operate the boom, arm and Bucket without load for 5 times to cycle The hydraulic oil in the hydraulic system For 5 minutes

NOTE: do not let the cylinder to reach two dead point

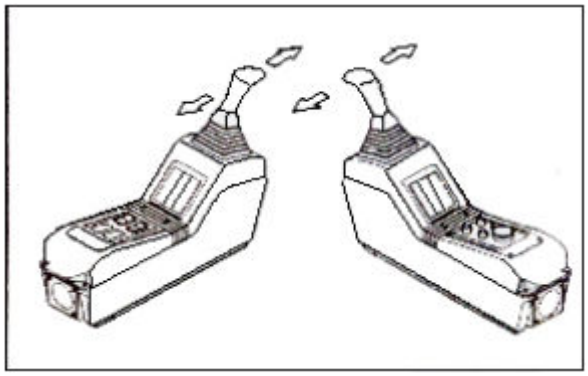

Pic3-18

5. Put the accelerator operating bar on the high speed position (Pic3-19)

6. Repeat the procedures of “3” for 5 minutes again, if the working temperature is still low, keep operating, but be careful.

7. Check the interval by lifting the working devices. Then slowly cycle 3times clockwise and anticlockwise.

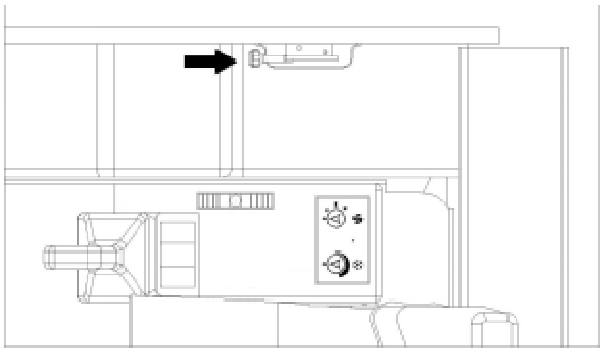

Pic3-19

8. Put the working device on ground to let one side of the track shoe off ground on a firm ground, the other side track shoe on ground, control the traveling motor forward and backward for two times, then check the other side track shoe in the same way.

Stop the engine

NOTE: running the engine idly for 3-5minutes before shop the engine, unless the heat may cause problem

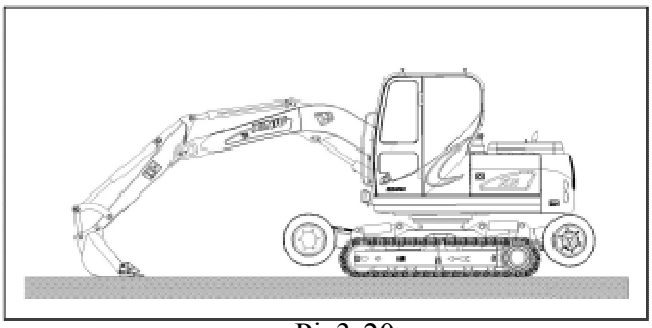

Pic3-20

to the engine,

1. Park the excavator on level and firm ground.(Pic3-20)
2. Put the working device on ground, and confirm all the operations on the “middle position”
3. Put the accelerator operating bar on the lowest speed position (Pic3-21), then Running the engine for 3-5minutes in idle position

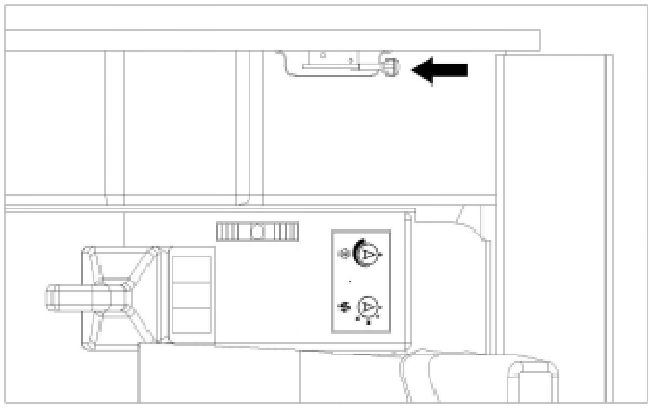

Pic3-21

4. Turn the key to “off” position(Pic3-22)，stop the engine
5. Pull out the key
6. Put the safe operating bar back to the “lock” position (Pic3-23), check again after stop the machine.

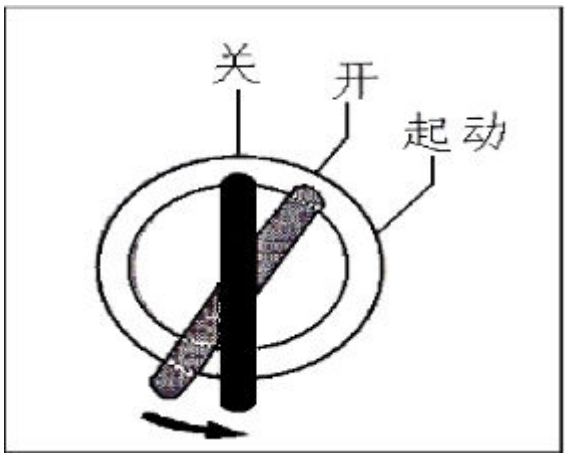

Pic3-22

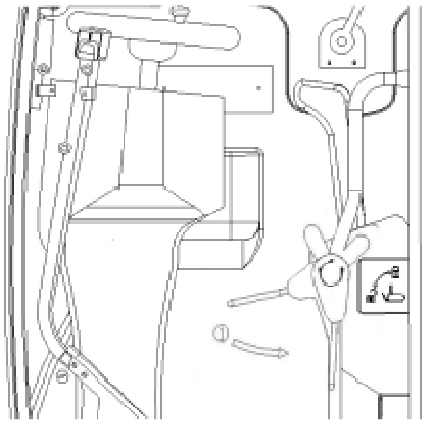

Pic3-23

Checking after engine stop

1. If the excavator oil or cooling liquid leak, check and repair.
2. Check the working devices and under part.
3. Refilling fuel
4. Clear the combustibles around the engine, such as leaf, paper and so on.
5. Clean the sludge on the under parts and track shoe, make sure all the, paddles and cab are clear and clean.

Safety pole

⚠WARNING
Be sure to lock the safety pole after stop the machine and leave the cab, unless may cause series accidents if touch the operating bar Leave the cab chair, must sure the engine is off(the key on the “off’ position), safety pole is locked

Draw back or put down the safety pole, be careful do not touch the operating poles

The safety pole can lock all the control working bars. So, if touch the working control bars do not carefully, no bad affect

1. Draw back the safety pole ①(Pic3-24), make the left operating device up to the lock position, when the safety pole (Pic3-24) is on the lock position, all the working devices do not work.

   NOTE: Low bucket (front working devices) on the ground, make all the control bars on the “middle position”, turn off the engine.

2. Pull down the safety pole to “unlock” position before starting to work

   NOTE: when the engine is not running, safety pole on “unlock” position, starting key on “ON” position, operating the handle, the machine can work. Accumulator can supply the pressure to control the valve element.

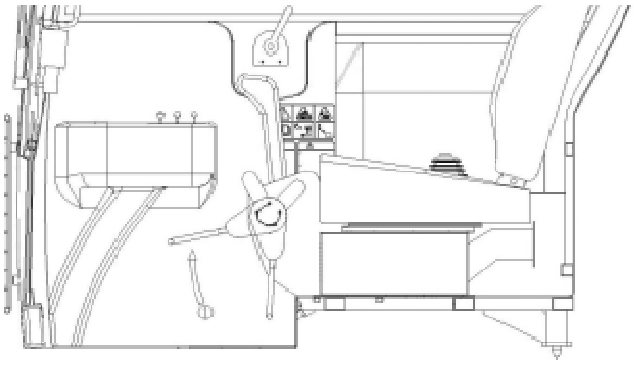

Pic3-24

Walking

⚠WARNING
1. Be sure to know the excavator parking direction before operating the walking rod. If you see the traveling motor by seating in the cab, what you see is the rear part. If you draw back the traveling bar, the machine goes forward. 2. Before walking, make sure there is no person on or around the machine, sound horn to warn that the machine is starting. 3. Before walking, make sure no sundries on the walking place 4. Back the machine, special attention and confirm no sundries at the back of machine 5. Operate the machine traveling rod on the smooth ground, do not start or stop suddenly. 6. Lock the controlling system before leaving the machine, stop the engine in case of some accident. 7. Downhill road, forbid use high gear

Walking overview

1. set the accelerator according to the excavator speed. (Pic3-25)
2. put safety rod ①(Pic3-26) on “unlock” position.

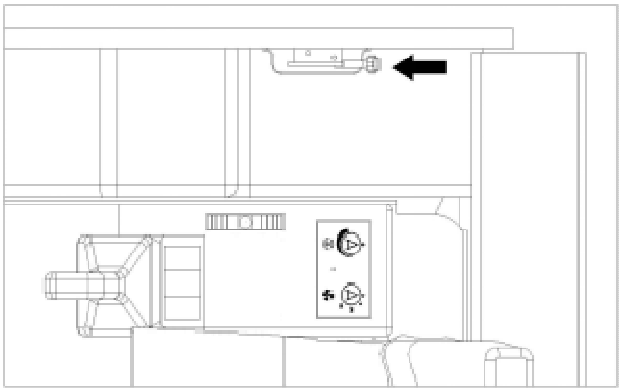

Pic3-25

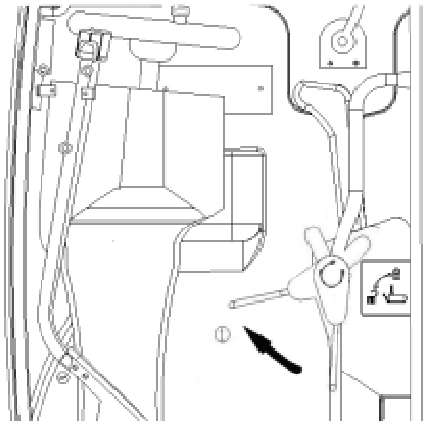

Pic3-26

3. Draw back the working device to let it off ground. (Pic3-27)

4. Make sure the bucket off ground completely.

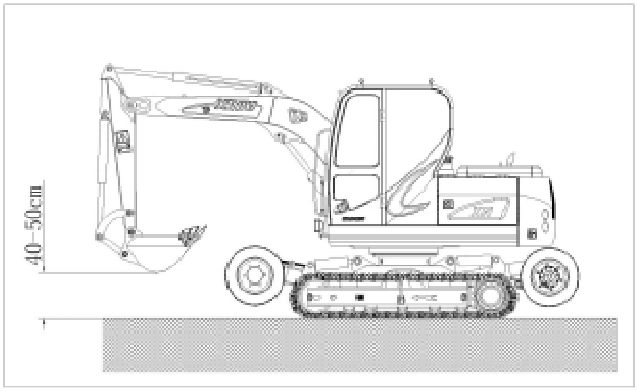

Pic3-27

5. Try to walk on firm ground, avoiding

suddenly move and turning in small angle

6. When walks on uneven ground, choose low speed(1.0—1.5km/h) to reduce the speed of the engine(Pic3-28)。
7. Walking slowly on irregular, frozen or uneven ground.

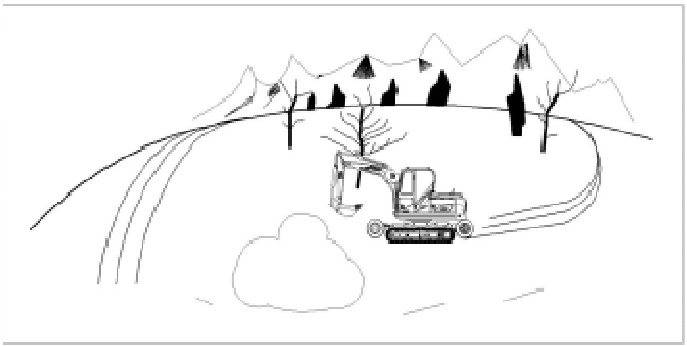

Pic3-28

⚠WARNING

- Keep the bucket ground clearance 200~300mm.
- Do not stop the machine on slope Pic3-29
- Choose a safe way when climbing
- Do not turn when walking on slope.
- If the excavator slides or is unstable, put the bucket into ground to brake.
- Avoiding to work on slope before make sure it is safe, the machine may turn over.
- Swing the excavator with load on slope is very dangerous.
- If it is inevitable, first fill up and make even
- To let the excavator works on even ground as far as possible. Pic3-30
- Avoid machine turn over, do not working on over 30 slope position working

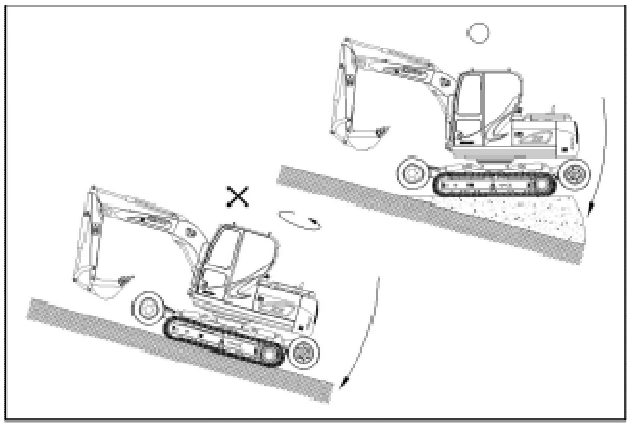

Pic3-29

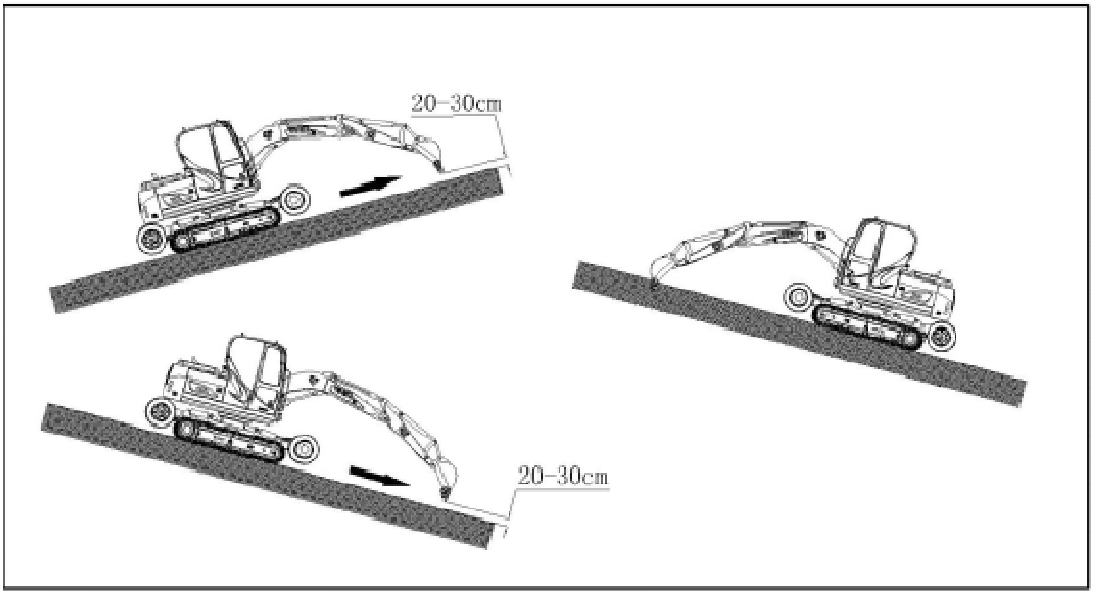

Pic3-30

8. Walking along the slope, do not walk across the slope.Pic3-31,extend the arm, low the boom, make the bucket about 300mm distance ground, if the machine slide or not stable, low the bucket to make big control. If the engine off, low the bucket, make sure all the control bars at the middle position, then restart the engine

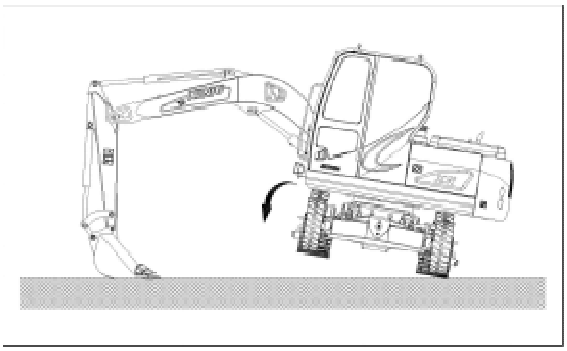

Pic3-31

NOTE: On the slope, even the engine is off, do not do the swing working; On the slope, do not open the cab door, cab door must be fixed

9. If there is dust or sands on the track shoe, lift the two track shoes and turn so to clear it.

⚠WARNING
If to support any part of the excavator by boom or arm, swing the bucket to make sure the under part of the bucket touch ground, and the angle between boom and arm should be 90 degree。

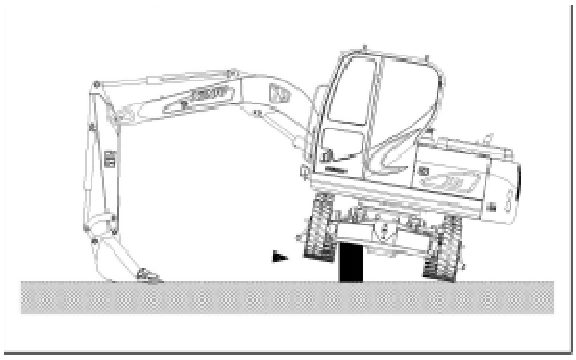

Pic3-32

Make sure the sludge is cleared (Pic3-32).

10. When going straight(Pic3-33), push forward or pull backward the operating rod/ pedal. The movement of the operating rod / pedal bigger, the faster of the machine will be.

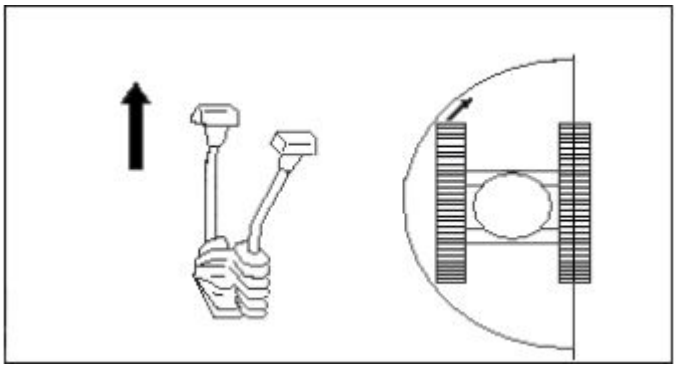

Pic3-33

⚠WARNING
There needs a trailer to transport the machine is the displacement distance is more than 2km, if in 2km, the machine should be intermittent to move, walking for 10 minutes, then rest for 5 minutes, unless it may cause series damage to the machine.

11. If only control one operating rod forward or backward, the excavator will circle around the still track shoe.(Pic3-34)

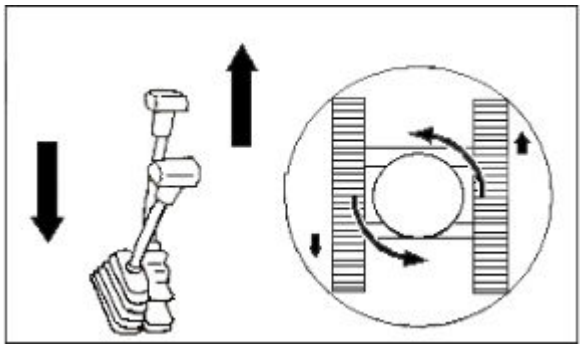

Pic3-34

12. One track move forward, while the other track move backward, the excavator will circle around the machine center.(Pic3-35)

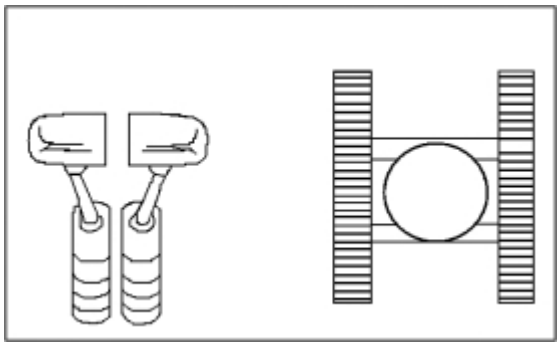

Pic3-35

13. Stop walking (Pic3-36)—put the operating rod in the center position, the machine will brake automatically and parked.

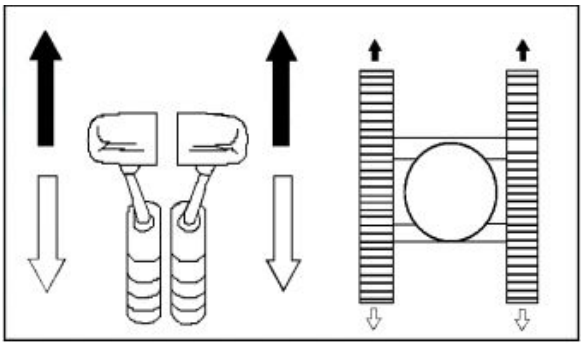

Pic3-36

Action bar (ISO) model operation manual

⚠WARNING
Please check around the machine before swinging the machine.

NOTE: When start to work, operate the control bars slowly, check the swing moving and front working devices.

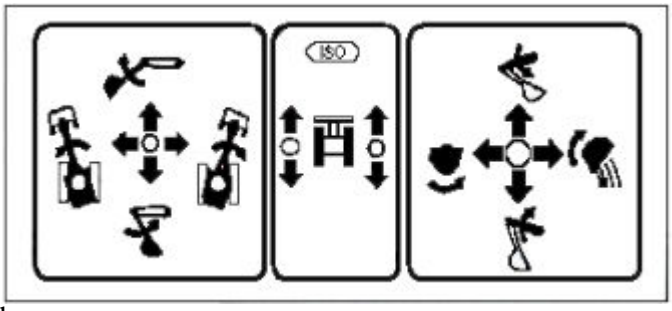

The structure of action bar on this excavator meet to the criterion of ISO, do not change the valve and pipes casually.

There are indicator drop on the right side of cab.

Pic3-37

Pic3-37

Here is the indicator drop of boom, bucket arm and bucket.

Left operating rod (Pic3-38 and Pic3-39)

①bucket arm stretch out

②bucket arm draw back

③swing

④swing

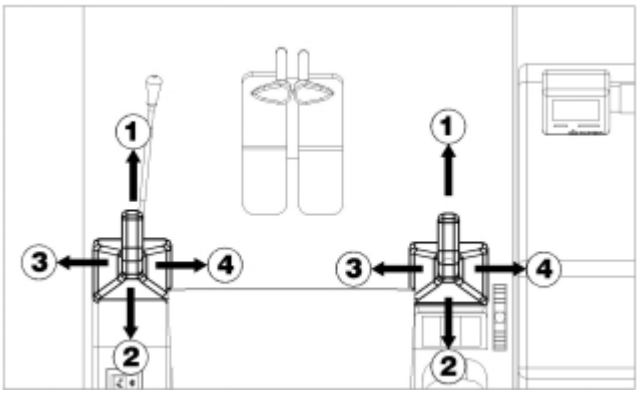

Pic3-38

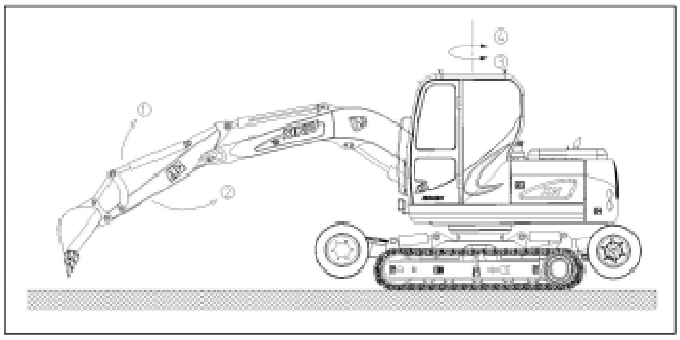

Pic3-39

NOTE: swing brake is realized by the spring and release the hydraulic pressure, when the operating rod is in the middle position or the engine is stop, the excavator will swing-brake automatically.

NOTE: the following phenomenon are normal, it is not the excavator's problem. The bucket arm may hesitate when working, when the bucket arm works, the oil supply may not sufficient due to the fast movement of the bucket arm caused by it weight.

Right control bar:(Pic3-40 and Pic3-41)

⑤boom low

⑥boom up

⑦bucket digging

⑧bucket unloading

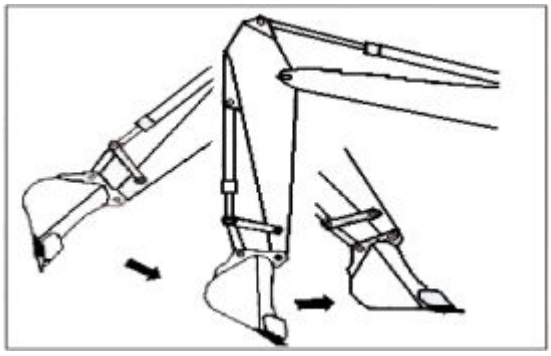

Pic3-40

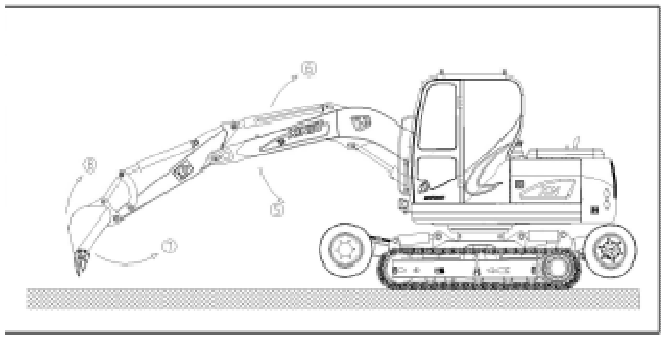

Pic3-41

NOTE: Even engine off, control bars also can make the front devices on the ground, make the safety pole on the “unlock” position, and make key on the “turn off” position.

Operating instructions

⚠WARNING
When operating the machine work, do not put your feet on the walking operating rod, the machine may move suddenly.

1. First to know the terrain and the edaphic condition before working, level the earth if it is necessary(Pic3-42)

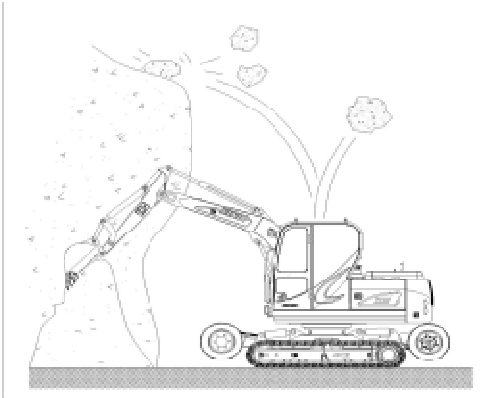

Pic3-42

2. Install window guard board if it is possible to be hit by drop stone or other thing. (Pic3-43)
3. Check the hardness of working area. If it is not solid enough, first reinforce before working.

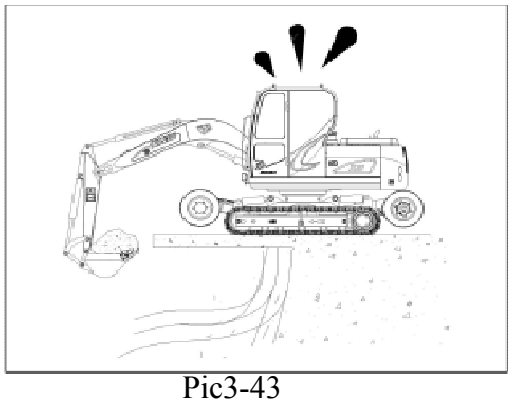

Pic3-43

4. The boom, bucket arm or the bucket may touch the machine body in some working environment.

5. Do not make the cylinders extend all, then shall damage the machine.
For example: the arm cylinders extend all, then the bucket cylinder extend to work.
Pic3-44

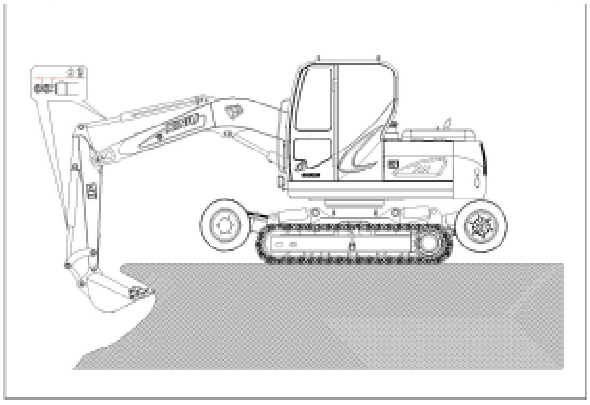

Pic3-44

6. When the bucket is resistance on the ground, do not move or swing (Pic3-45)

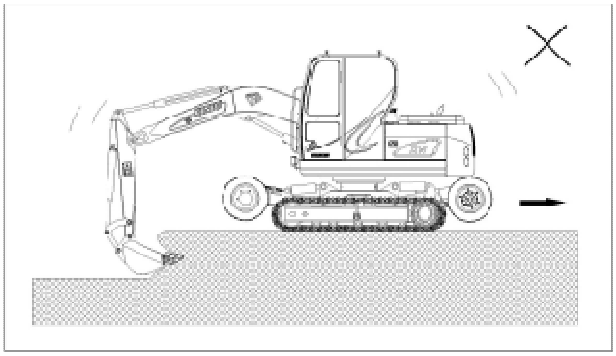

Pic3-45

7. Do not increase the digging force by using the machine self weight(Pic3-46).

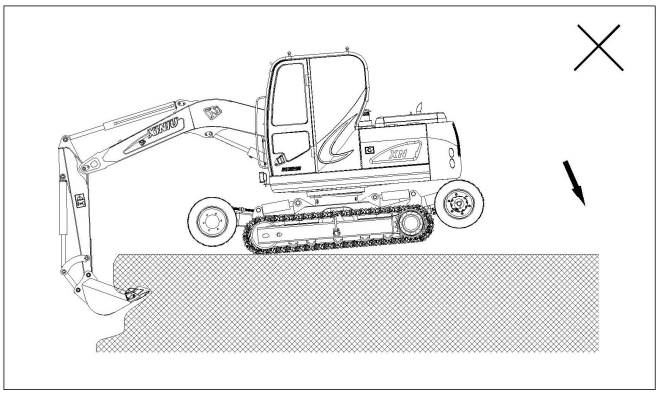

Pic3-46

8. When works on soft earth or muddy ground, be careful the sink of the machine.

9. When works by the road or near the cliff. Keep the solid of the earth. In some case, do not work lonely, keep the traveling motor on the rear part of the machine. (Pic3-47)

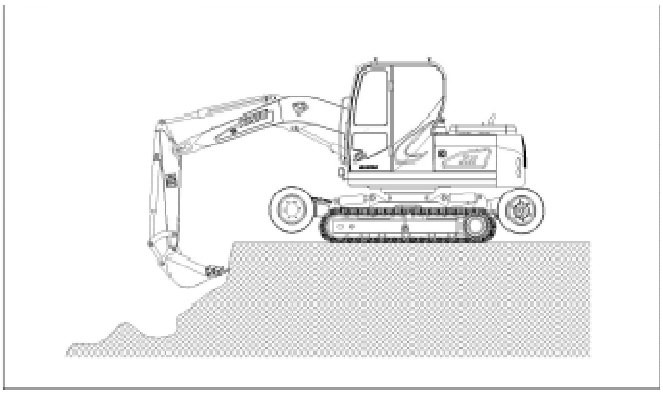

Pic3-47

10. Do not dig the under of the Machine (Pic3-48).

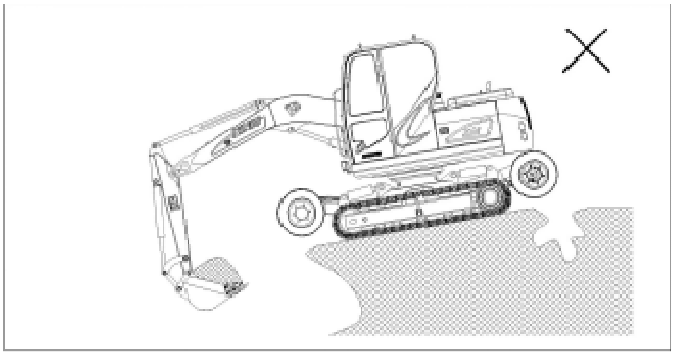

Pic3-48

11. Keep the enough space between the machine and the wires in the air. Pic3-49

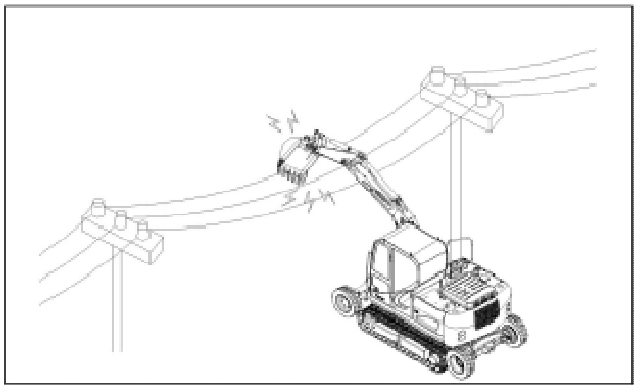

Pic3-49

12. When works in tunnel or in building, be careful do not crash the roof and keep good ventilation. Pic3-50

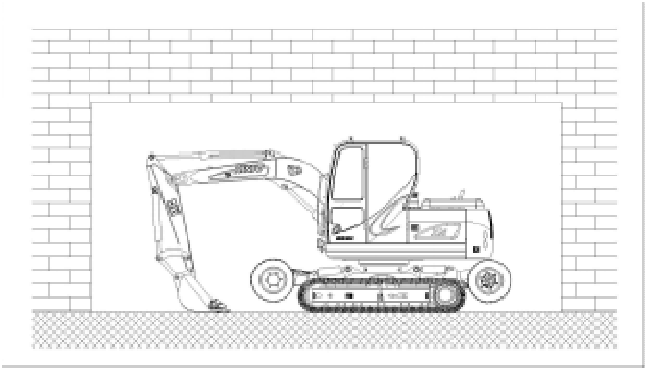

Pic3-50

13. Do not use the bucket as a hammer or a pile driver, it is dangerous, will cause serious problem to the machine. Pic3-51

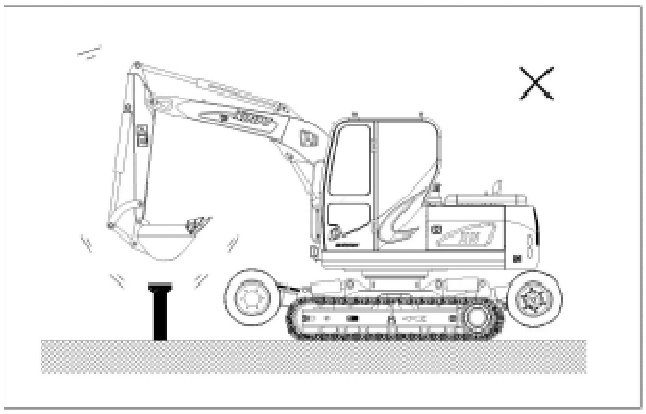

Pic3-51

14. When the track shoes is off ground, do not digging anymore, otherwise may brake some parts of the machine. Pic3-52

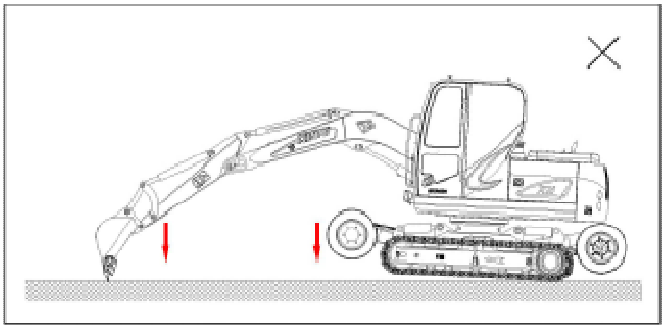

Pic3-52

15. When traveling on high speed, do not operate the rods quickly.Pic3-53

a) Avoiding start suddenly

b) When the machine needs to move to opposite direction, it should stop first.

c) Avoiding stop suddenly, push back the operating rod to neutral position, do not release the rod suddenly.

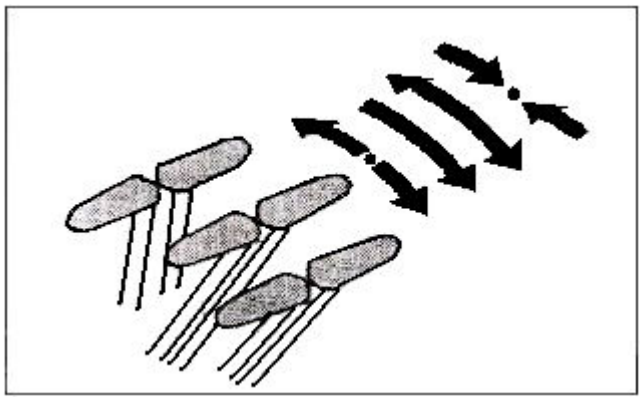

Pic3-53

16. Please keep the machine balance when operating the excavator with long or heavy working device, the following instructions should be applied.

⚠WARNING
· Do not raise the working device when go downhill · Do not traverse the slope, go straight when do uphill or downhill. · Be careful when swing the excavator on slope · There must be enough swing cease time, long or heavy working device will cause extra momentum, which will prolong the cease time. · Sure all the attachments are authorized be fixed right

17. Do not move soil or other things by the swing of the machine. May cause serious problem to the inner parts.

Working under water

⚠WARNING
The gradient of the machine can not exceed 15 degree when work in water, otherwise the radiator or the fan maybe broken.Pic3-54

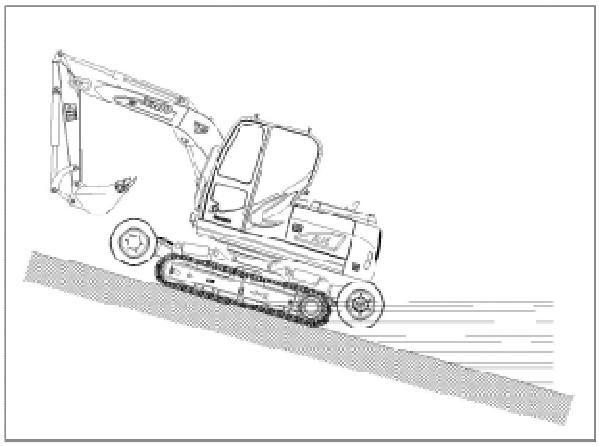

Pic3-54

1. If the riverbed is not even or the water is swaft, be careful, do not let the water cover the above side of the guide pulley, do not let water or sands to into the rotary unit or slewing bearing. Pic3-55
2. The machine may sink if works on soft ground.

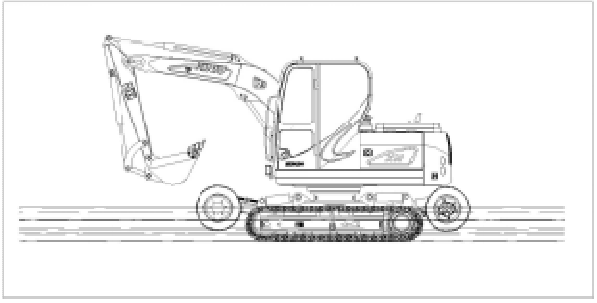

Pic3-55

NOTE: if the water or mud goes into the rotary unit, stop the engine, park the machine on a solid and dry area, check carefully, clear all problems then work again.

Working on poor holding capacity ground

1 . Try to avoid working on poor holding capacity ground
2. Try to let the track shoes touch the ground fully, do not let the track shoes sink in the earth too depth, otherwise can not be pulled out.
3. If running with problem, make the bucket on the ground, packing up front devices, use winch pull the machine out.Pic3-56

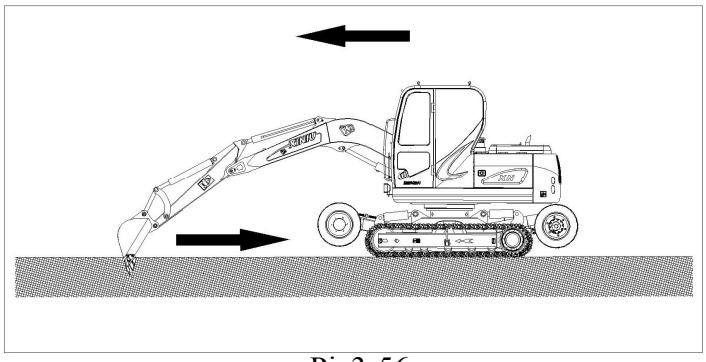

Pic3-56

⚠WARNING
Be careful when raise the machine by using the working devices, the machine may tilt.Pic3-57

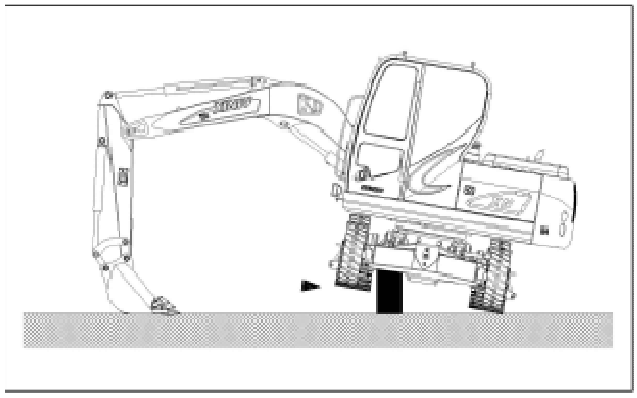

Pic3-57

4. If sediment or stones into the machine track shoe, make the machine can not running, then use the front devices support one set track shoes, turning the track shoes front and back, cleaning the sundries
5. If the machine stop walking, the ground is good, then it can be trailed by rope. refer to page 3-29 procedures.

Level ground

▲IMPORTANT
Do not overuse the bucket to level ground; otherwise some parts will break due to overload working. Pic3-58

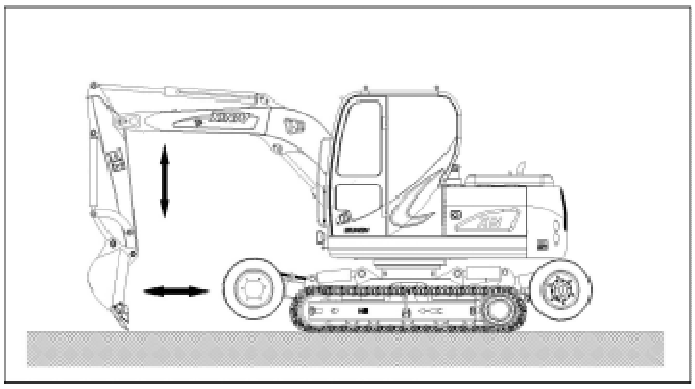

Pic3-58

1. Using the dozer plate to level ground.
2. Using the boom, bucket arm and bucket.

A. When level the ground from front to back, raise the boom, at the same time slowly move the bucket arm, when the bucket arm is near the machine, stably lower the boom to let the bucket move horizontally

B. Do in the reverse order when level ground from back to front.

C. When level like the wall, the soil buildings (like dam), do up to the first step comprehensive operating technology instructions

Pay attention to the position of dozer plate

1. The dozer plate may touch the boom cylinder and the bucket when it is forward, be careful.

2. Keep the dozer plate backward when digs deeply.Pic3-59

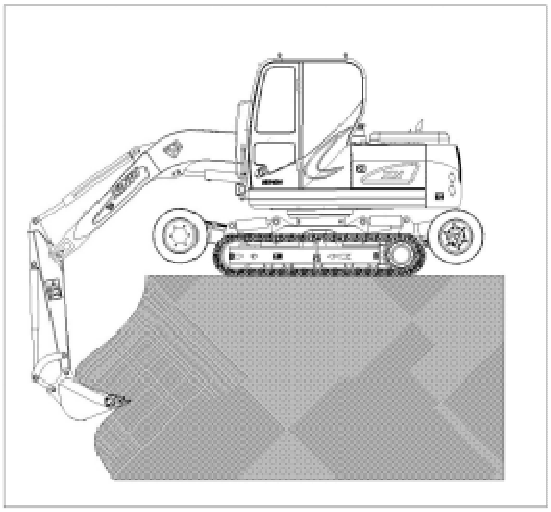

Pic3-59

Use the dozer plate need to take the prevent measures

1. The dozer plate is to bulldoze, not for digging, otherwise it will damage the dozer plate and the hydraulic systems
2. The dozer plate can not stand heavy thing, otherwise it will damage the dozer plate or track system
3. Do not let the dozer plate hookup any thing when walks, otherwise it will damage the dozer plate or track system
4. Be sure the ground is even and solid when using it to support the excavator.The dozer plate touch the ground firmly Pic3-60

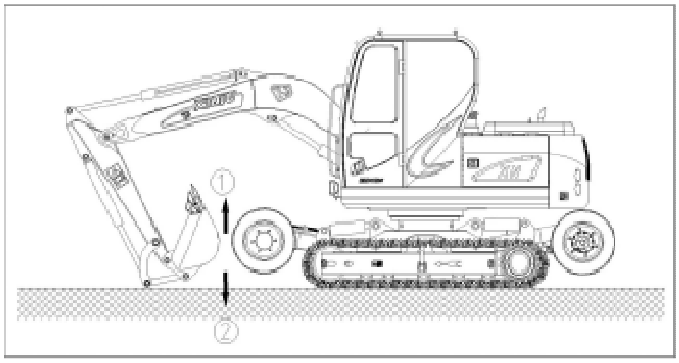

Pic3-60

Be careful when rising the working device

1. Be careful when rising the front working device, do not let the bucket touch the dozer plate.Pic3-61

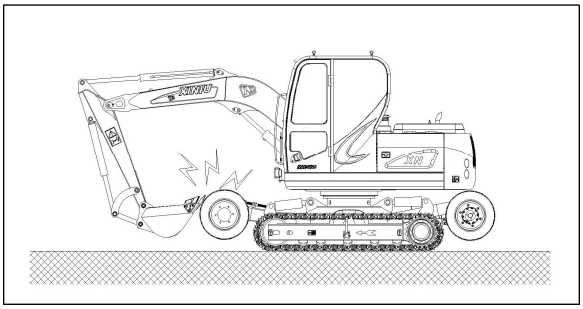

Pic3-61

Be careful do not let the dozer plate touch anything

1. Do not let the dozer plate touch anything, otherwise the dozer plate cylinder or other parts may be broken.Pic3-62, Pic3-63

2.

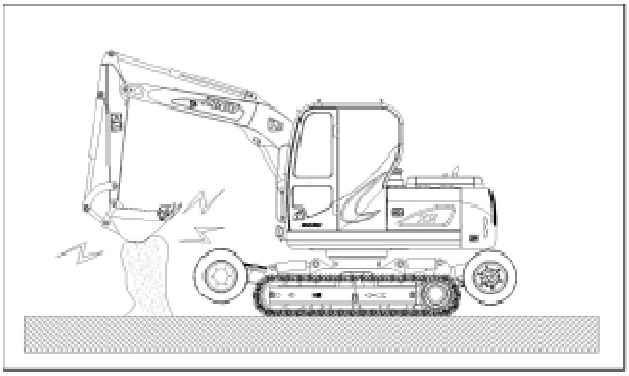

Pic3-62

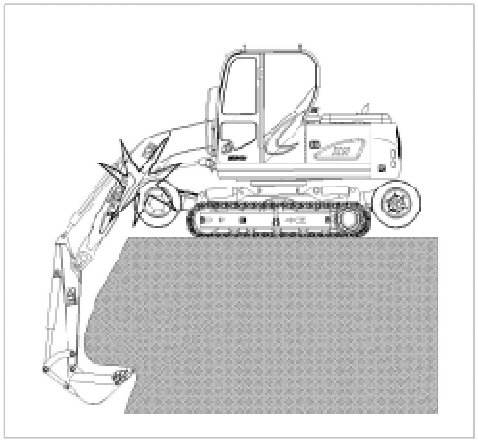

Pic3-63

Operating track construction

Avoid the tracks damaged, so please do like below operations:

1. The tracks do not running or turning on the spiny things. Pic3-64, Pic3-65

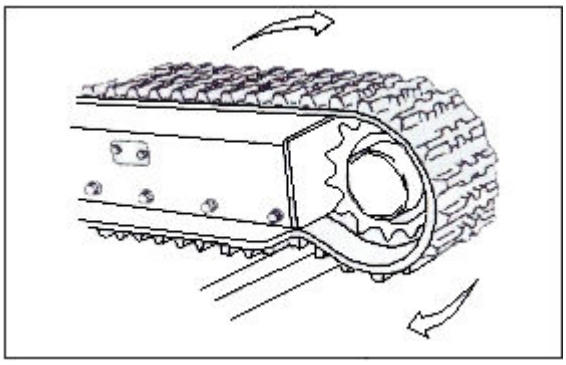

Pic3-64

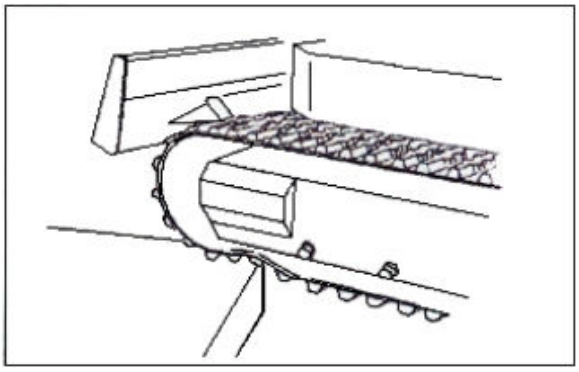

Pic3-65

2. More sundries into tracks will increase the tracks workload, damage the machine parts

3. Avoid turning suddenly on the power friction road. Pic3-66

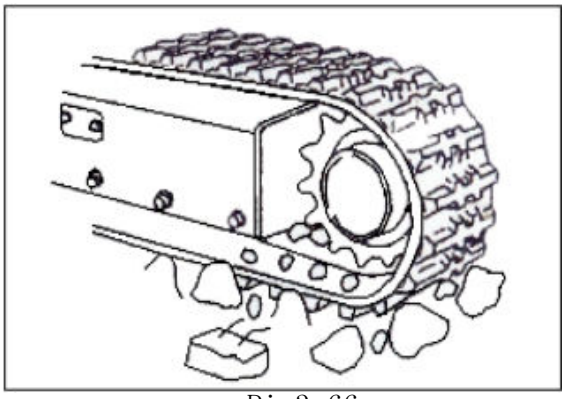

Pic3-66

4. If the tracks with the diesel oil or hydraulic oil, cleaning rightly.

5. Tracks avoid touch the salty water or salty gas, the salty water and gas shall corrode the track pins and rollers

6. If the tracks do not use for long time, make the tracks at the cool and dry place.

7. If one set tracks and front devices be jacked up, can not use the other set tracks running, then shall be weared

8. When running, make the tracks are Fastening. Pic3-67

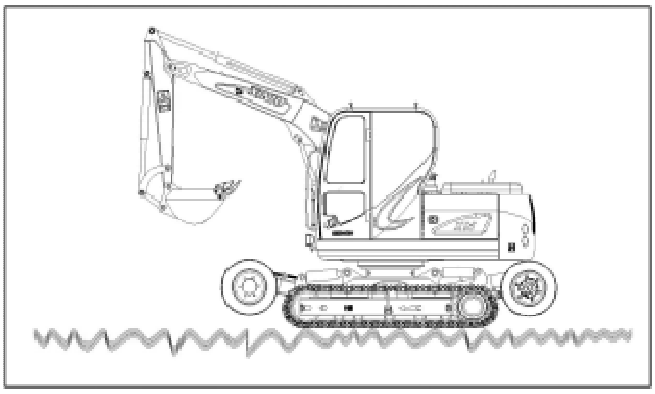

Pic3-67

Parking of excavator

1. Park the excavator on a solid even ground, lower the bucket and dozer plate. Pic3-68

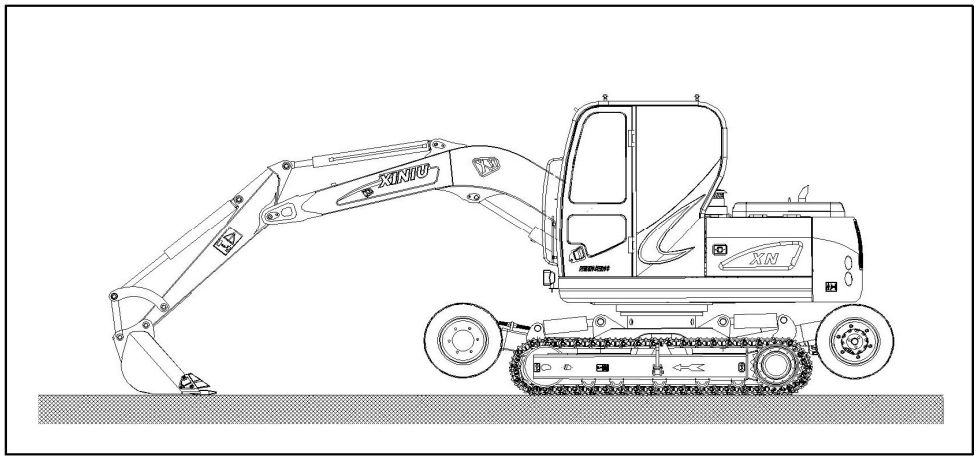

Pic3-68

2. Put the engine manual accelerator operating rod (Pic3-69) on the idle position, run the machine for 3-5 minutes

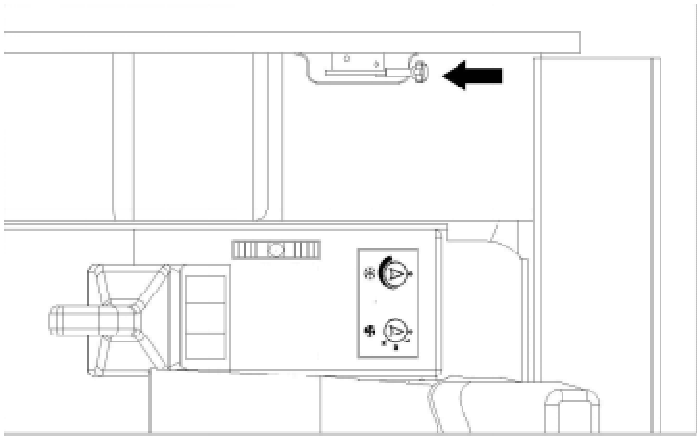

Pic3-69

3．Turn the key to “OFF” position, shut down the engine(Pic3-70)

4．Pull out the key

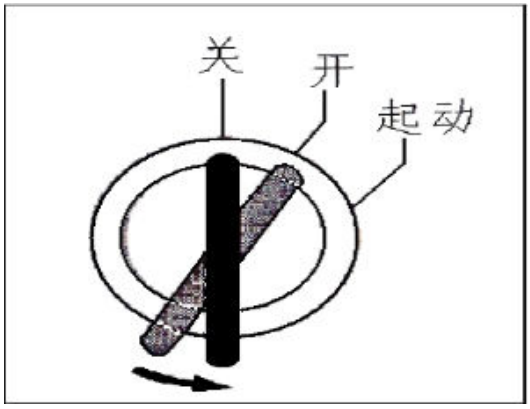

Pic3-70

5．Put the safety rod on the lock position.Pic3-71

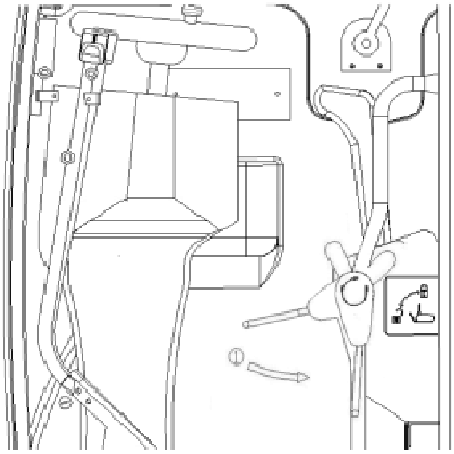

Pic3-71

Drawing program

⚠WARNING
Do not use a damaged cable or chain, they can fracture and cause an accident. When holding a chain or rope, need to wear gloves. When drawing the excavator, use the rope or chain with enough workload Make the chain or cable line as shown in Pic3-72, on the crawler frame. Do not use the back blade to drawing the machine, otherwise will be damaged Between the chain (cable line) and machine, use one protective object(such as wood, etc.) to prevent the chain(cable line) be damaged Insert has a protective effect on the rope and the body into an object (such as wood, etc.) to prevent the rope is lost

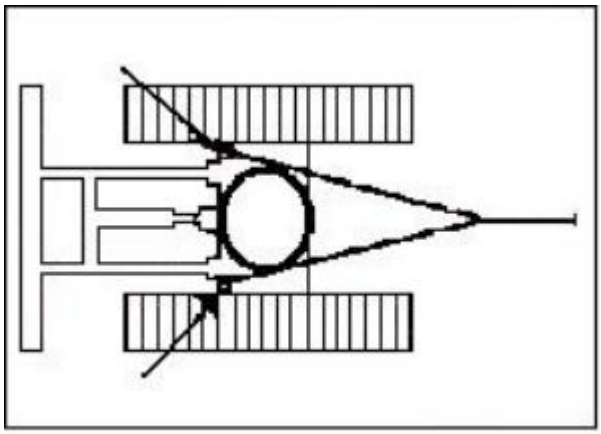

Pic3-72

If the tracks into the mud, use one rope connect on another machine, the rope tie on the machine chassis, use wood brick on the edge place, avoid the machine and rope damaged

Hydraulic Breaker

▲IMPORTANT
Add the hydraulic breaker and line by the user, not get the authorization from the RHINOCEROS, not within the excavator warranty

Hydraulic breaker choosing

If add the hydraulic breaker, need to consider the machine stability and utility, also need to consider the hydraulic pressure and flowing. If you want to choose one fit breaker for the machine, you need to contact RHINOCEROS sale department.

Fix hydraulic breaker

1. When fix the breaker, fix up to the drawings
2. If need to dismantle the breaker from machine, need to use one plug to plug up the rubber pipe and steel pipe, avoid to sundries into the hydraulic system
3. Use plug to plug up the breaker joint, avoid sundries into.
4. Before operate the machine, check all the hydraulic joints, if it is with leaks or loose

Operating of hydraulic breaker

NOTE: when the hydraulic oil pressure and flow setting need to change, refer this manual maintain content

1. Must know and understand the operating manual of breaker
2. Check all the machine and hydraulic line connecting place
3. Do not use the breaker like hammer, like pic3-73

   Do not low the breaker at much higher position. The breaker is weight, low is fast, so do not low the breaker at much higher position, otherwise damage the parts

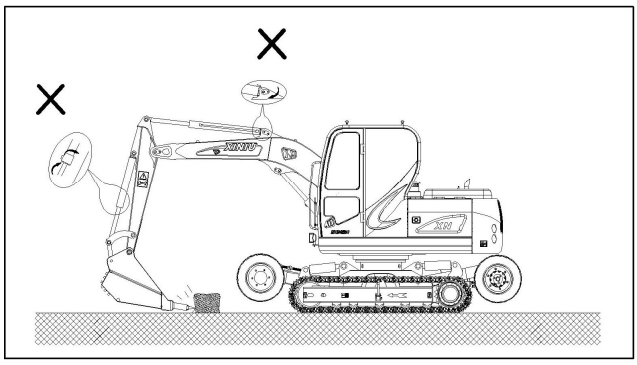

Pic3-73

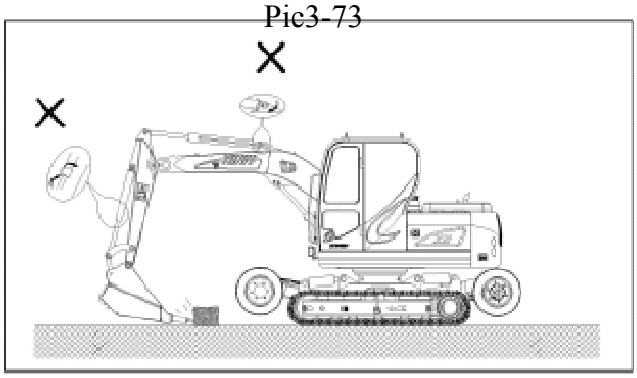

Pic3-74

4. When operate the breaker, do not make the boom and arm extend all cylinders length Pic3-74

   The end of cylinder pole and head keep more than 50mm, then operating the breaker, can avoid damage the cylinders

5. If the cylinder rubber pipe is intense Vibrate, do not use the breaker. Pic3-75. Check the breaker hydraulic energy accumulator if is damaged, if need to mend. If the machine working at this condition, the structure parts and hydraulic parts may be damaged

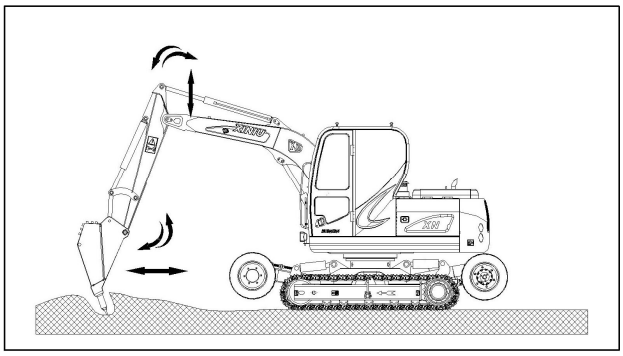

Pic3-75

6. If no the related equipment, breaker can not work under the water, if work under the water, the breaker seals shall be damaged and rust. sundries and water into the hydraulic system, then will damage the dydraulic system, make the breaker insert in the water.

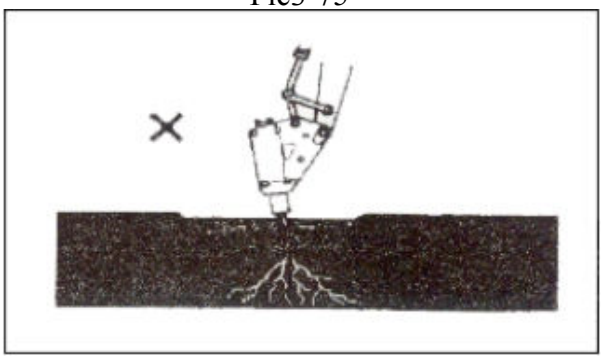

Pic3-76

7. Do not use breaker to sling or drag any thingsPic3-77

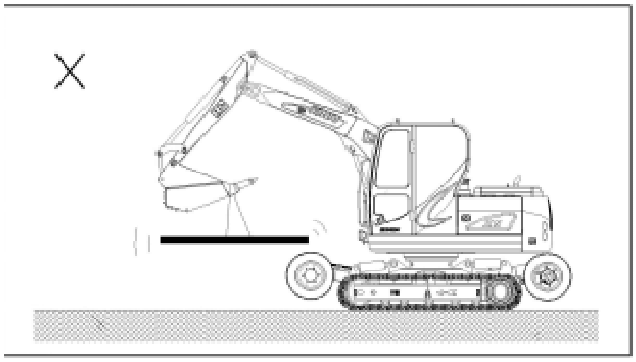

Pic3-77

8. Breaker just can working at the machine front and back, do not use the breaker to work at any side of machine, when operating the breaker, do not back and front round. Pic3-78

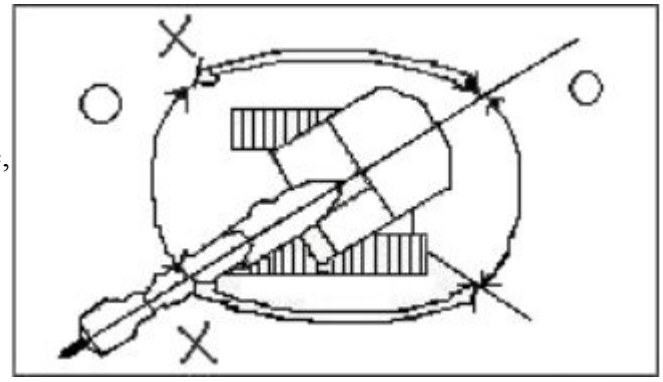

Pic3-78

⚠WARNING
If the excavator frame and tracks in 90 degree, then use the breaker may be reduce the machine using life, or cause the machine side turning

9. Running or stopping machine, do not use the breaker and make the breaker on the arm or boom position. Pic3-79

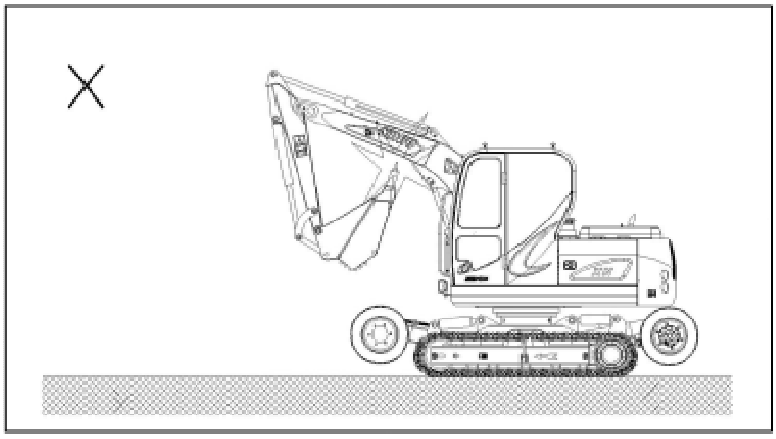

Pic3-79

10. Do not use the breaker or arm to move the crushed things, special to avoid use swing

force to move, otherwise may be damage the boom, arm, swing structure and breaker Pic3-80

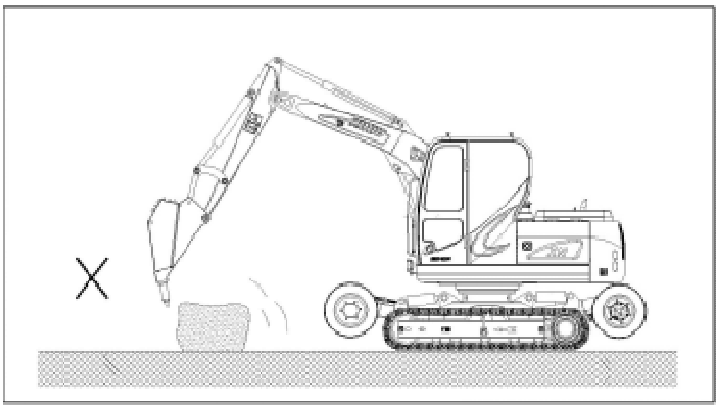

Pic3-80

Start breaker

1、Fall down breaker pedal at the left side, the breaker is on-state. Pic3-81

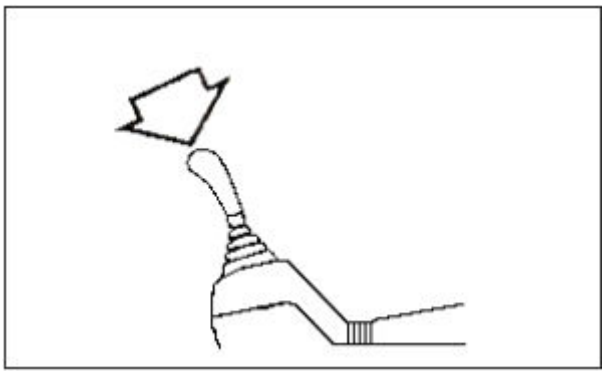

Pic3-81

2. Make the breaker head on the need position, tread the control pedal at the left side(Pic3-82), when breaker finished the work, loosen the pedal

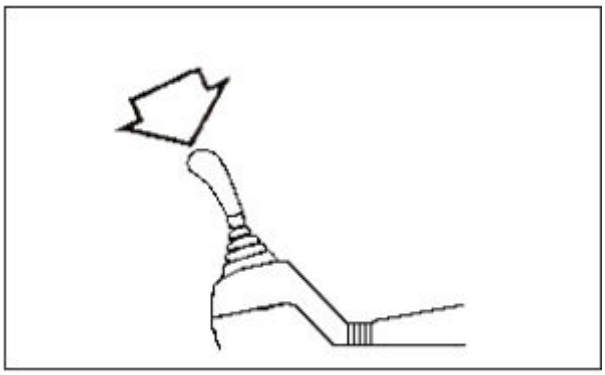

Pic3-82

Hydraulic oil and filter replacement cycle

When use the hydraulic breaker, the hydraulic oil will be contaminated and the viscosity will be soon decline, because breaker working conditions is worse than the digging working conditions. Referring to the below table, replace the hydraulic oil and filter, in order to prevent the hydraulic oil composition change and shorten the hydraulic components using lift. (Special the main pump)

Working devices	Break working time	Hydraulic oil	Filter
Hydraulic breaker working	50％	900 hours	100～150 hours
	100％	600hours	100～150 hours
Lubricate the front working devices	If use breaker working, then lubricate the front working devices per 50 hours		

NOTE: Hydraulic oil and filter replacement interval period depending on the hydraulic breaker working time. All these intervals must be accordance with the regular maintenance to do.

IV Inspection, maintenance and adjustment

In order to maintain the normal working condition of the equipment, maintenance and inspection of the equipment is necessary. The following contents are listed for checking the time interval, the location of each system or component and the checking method.

Attention：*The following contents list the contents of the maintenance check and the time interval, maintenance period may be reduced according to the actual situation, extremely hot or dirty environment require more frequent maintenance. For maintenance period should refer to the engine working hours of the timing table shows in the console side of the cab.*

Serial number

There are 2 serials number plates in the excavator.

The main serials number plate (Pic 4-1) is located in the front of the cab. Other related numbers are attached to the left side of the Boom. Engine serial number and engine model (Pic 4-2) posted on the engine. Other instructions for the engine please check the label on the engine.

Please pay attention to these numbers and their location, no matter when, They are very important for the normal operation of the warranty.

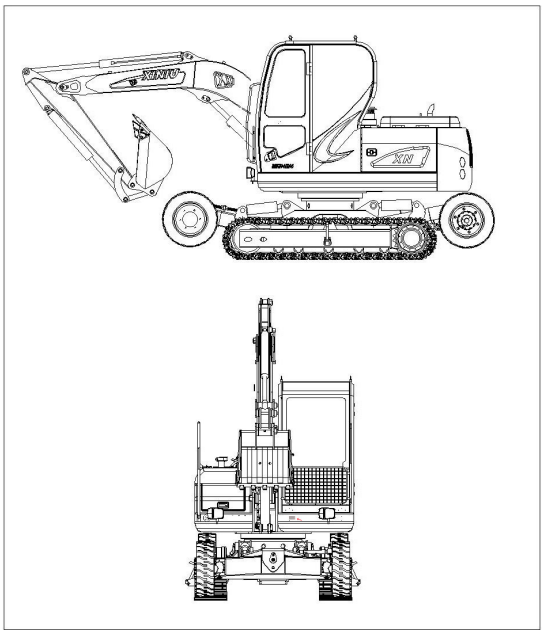

Pic 4-1

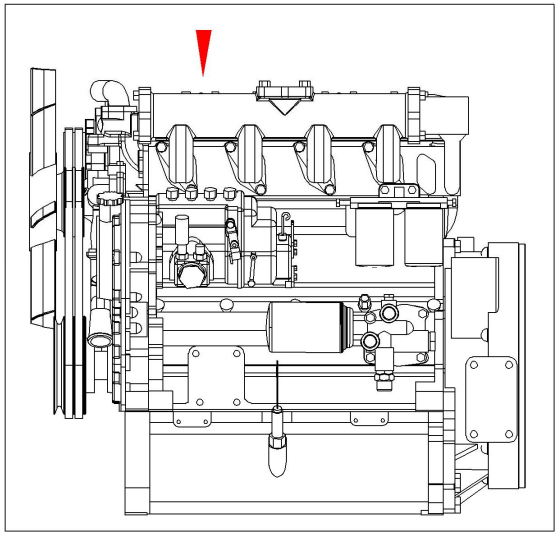

Pic 4-2

Safety notice

1. In order to prevent some unexpected operation of the maintenance process, make sure that the hydraulic control system has been locked and hang out warning signs (warning).
2. Clean up the spilled liquid, especially the liquid around the engine.
3. Check all fuel lines, check connections, pipes, filters, and O - ring, etc, if there are any signs of wear or damage.
4. If an inspection or test procedure is required to start the engine, make sure that all the irrelevant personnel have been left.

Preparation and setting of equipment maintenance

Please park the machine according to the provisions of this manual before the maintenance.

Attention: *Some specific maintenance requirements of the machinery have different ways of parking, After the maintenance, the machine must be restored to the following position*1.

1. Put the machine on the level of solid ground, as shown in pic 4-3 that extended the arm and put the bucket fell to the ground.

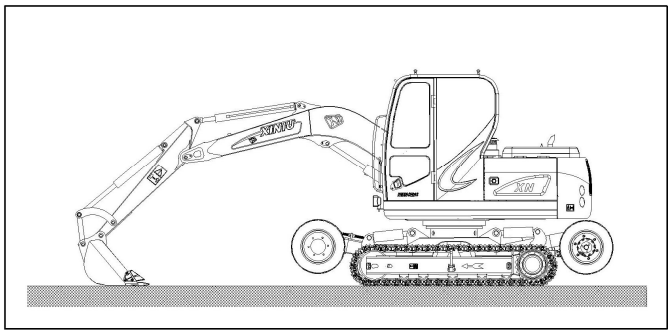

Pic 4-3

2. Turn off the engine.

3. After the shutdown, the starting switch is hit to the "on" position, the control handle (including the travel handle) in the limit position back and forth several times, in order to release the residual hydraulic pressure, and then pull out the key.

4. Check the oil level, the oil level line between the specified marks, if need to add hydraulic oil.

▲Warning

Be careful if you have to turn on the engine during maintenance. Should be a person always in the cab and not leave when the engine work.

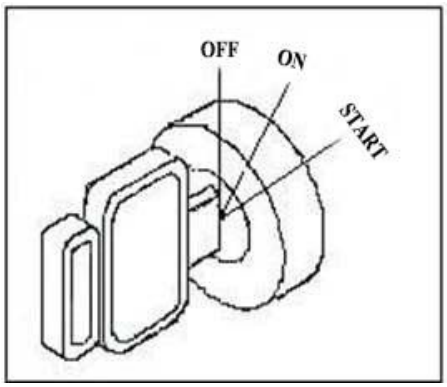

pic 4-4

5. Put the safety handle ① (Pic 4-5) on the "lock" position.

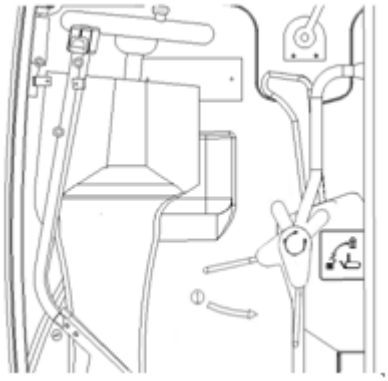

Pic 4—5

6. Please hanging a warning sign, “CHECKING AND NO TOUCHING” in the cab door or the boom before the maintenance.

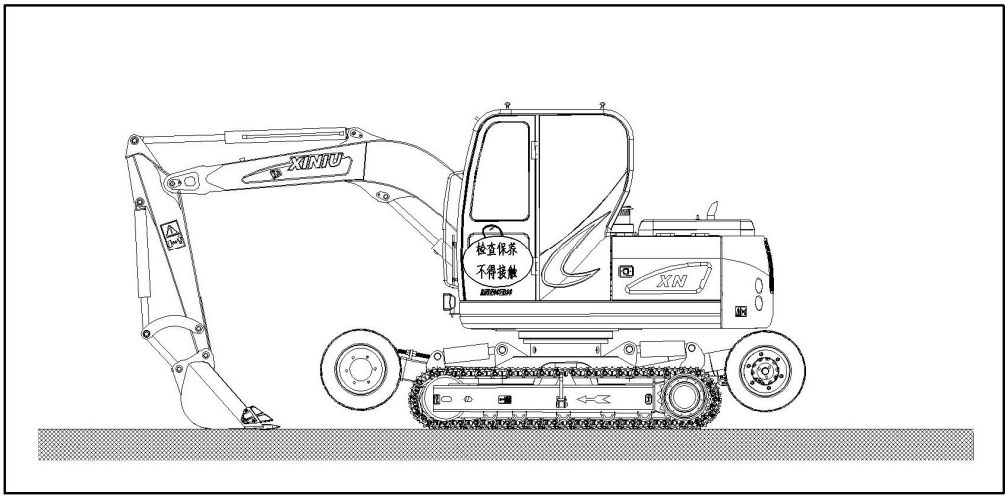

Pic 4-6

Recommended table of Lubricating Oil

Notice
Do not use any products include lubricating oil that are not approved by the Rhinoceros Company.

Manufacturer	Hydraulic Oil	Engine Oil	Lubricating Grease	Gear oil
Callex	Callex HD 32	Callex RPM Delo 300	Multifac EP	Multi—Purpose EP90
Exxon / Esso	NUTO(anti-wear) HD 32 or 48	Exxon XD．3 straight Weight 0r 15W40	Ronex MP#2 or cold temp use Ronex MP#1	Spartan EP220 orExxon GX 80 W90
Idemitsu Kosan	Daphne Kosan 46WR	Apopoil motireS300	Daphne Corrone#2	Aporoil Gear HE 90
*Great Wall	HCHM46# L-HM	CD15W-40	GreatWall gm Lithium grease2# OR COLD TEMP USE 4#	85W/90 GL-5
Nippon Seikiyu	Super Highland $26 or 32	High D．S3 Straight Weight	Lipanoc Grease	Niseki SP90 or EP 90
Shell	Tellus 32	Rotella T 15 W40 or T3 0(winter)or T40(summer)	Alvania EP#2	Spirax HD 80W90 or DONAXTD (transmission)
Total	Total Equivis ZS46－III	Tbtal Rubia6600 1 5 W40	Tbtal Multris EP#2	Total DA80W90

Warning
Do not mix different manufacturers of oil, Rhinoceros company is not in favor of the use of other brands of oil, if you choose the other oil, then the oil standards should meet or exceed our standards. When chose engine oil, YANMAR engine company requires the use of APICF4 to superior engine oil.

MAINTENANCE PERIOD

10 hours / Daily maintenance

•Injection lubricating grease to Pin shaft of Boom, Arm and Front device •Check the engine oil level •Check the hydraulic oil level •Check whether there is any leakage in the hydraulic system •Check the fuel level •Check the oil and water separator •Check fuel system for leakage •Check the cooling system and add the coolant as required •Check the liquid level of window cleaning fluid •Check whether worn of the bucket teeth and the side teeth •Check the engine fan belt whether broken and the wear and tightness force is suitable	• Check whether cracks or open welding the structure of the parts (refer to 4－13) •Check all operating switches. (refer to 4-13) • Check all external lights, speakers, control indicators, and monitor lights (refer to 4-13) • Start the engine, check the engine start-up performance, check the exhaust color of the start time and the exhaust color of the normal work, check whether there is noise (refer to 4-13) •Check all operation controls (refer to 4-13) • Check bolts and nuts to prevent loosening and loss (4—14) • Check the track part of the tension, whether loose, noise or damaged parts (rail links, track plate, sprocket and Guide wheel)(refer to 4-14) •Cleaning engine air filter protective cover (refer to 4-14)

50 hours / Weekly maintenance

• Per10 hours / daily maintenance check (refer to 4-15) •Inject butter into the shaft (refer to 4-15) • Inject butter into the rotary support (refer to 4-15) Check fuel tank vent valve (refer to 4-15)	• Replace engine oil and filter (refer to 4-15) • Check the water tank, oil radiator and condenser of A/C (refer to 4-15) •Check battery fluid and charge (refer to 4-16) • Clean filter mesh of diesel oil tank (refer to 4-16)

100 hours maintenance

- Per 10 hours / daily maintenance and 50 hour maintenance inspection (refer to 4-17)
- Clean the filter of the Air cleaner (refer to 4-17)

- Replace the hydraulic oil（refer to 4-17）
- Replace hydraulic oil filter（refer to 4-18）

200 hours maintenance

- Perform all 10 hours per day, 50 hours per week and 100 hours maintenance check (refer to 4－19)

- Replace engine oil and filter（refer to 4-19）

250 hours/Monthly maintenance

- Perform all 10 hours per day, 50 hours per week，maintenance check（refer to4-20）
- Discharge impurities from hydraulic oil tank（refer to4-20）

- Check the front working device bushing whether wear (refer to4-2l)
- Check hose clamp of fuel system (refer to4-21)

500 hours/Three months maintenance

- Perform all 10 hours per day, 50 hours per week，100, 250, hours maintenance checks. (refer to4－22)
- Replace the fuel filter（refer to4－22）
- Replace water tank coolant (refer to4-22)

- Replace hydraulic oil filter (refer to4-24)
- Replace air filter（refer to4－25）
- Check the oil level on both sides of walking speed reducer（refer to4-25）

1000 hours/Six months Maintenance

- Replace running gear oil (for each side)(refer to4-28)
- Check and adjust the cleaning valve (refer to4－28)
- Check whether the bolt is loose (refer to4－28)

- Perform all 10 hours per day, 50 hours per week，100, 250, 500 hours maintenance checks (refer to4－26)
- Replacing hydraulic oil and cleaning oil filter (refer to4-26)

1200 hours maintenance

Perform all 10, 50 100 hour maintenance checks（refer to4-29）

2000 hours/Annual maintenance

- Perform all 10 hours per day, 50 hours per week, and 100 hours of maintenance.
- Check generator and starter motor（refer to4－29）
- Check all vibration proof rubber blocks（refer to4－29）
- Record the results of each cycle test（refer to4-29）
- Check machine welding parts，if whether damage to crack or open welding（refer to4－29）

4000 hours/Two years maintenance

- Periodic replacement of important parts（refer to4-30）

10 hours / Daily Maintenance

Boom, arm and front connecting pin

1、Injection Lubricating grease into the front connecting pin per 10 hours

. As shown in Pic 4-7, take the work device down to the ground and close the engine.

. Press the grease fitting and injection the Lubricating grease with the grease gun to the specified point.

2、When it's filled, cleaning waste oil.

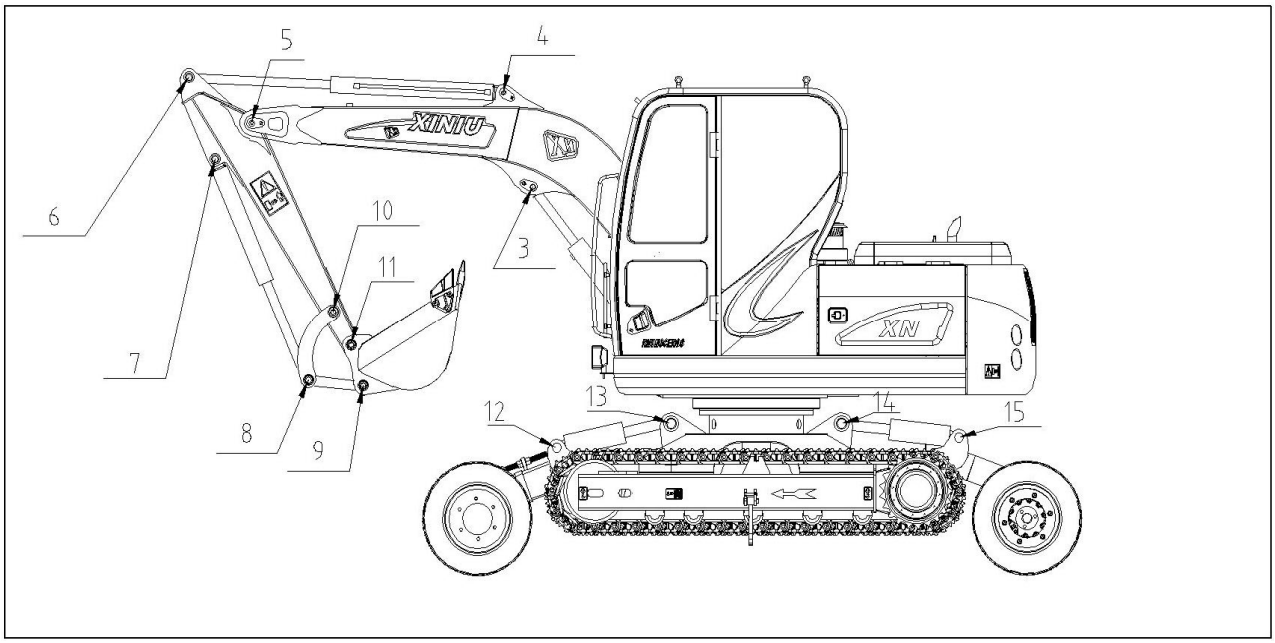

Pic 4-7

1、Pin of Boom

2、Fixed pin shaft of boom cylinder

3、Pin shaft of boom cylinder

4、Fixed pin shaft of arm oil cylinder

5、Pin shaft of arm oil cylinder

6、Connecting pin shaft of arm oil cylinder

7、Fixed pin of bucket cylinder

8、Pin of bucket cylinder

9、Bucket，Connecting rod pin

10、Pin of bucket arm &connecting rod

11、Pin of bucket&bucket arm

12、Pin of front chassis cylinder

13、Pin of front chassis cylinder

14、Pin of rear chassis cylinder

15、Pin of rear chassis cylinder

Check The Engine Oil Level

1. Stop the engine and after 15 minutes have a check. So the oil can flow back into the oil pan.
2. Use the oil level gauge to check engine oil level.
3. The engine oil level should be located between the H and L level gauge.

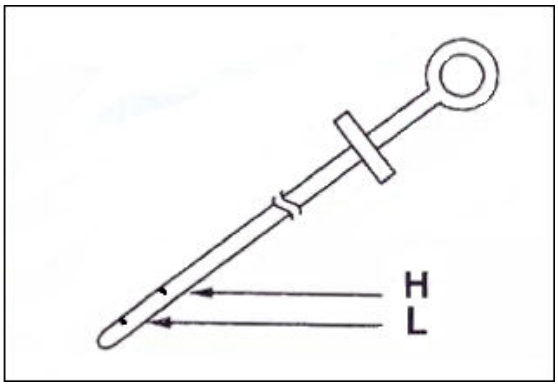

Pic 4－8

4. Can be filled with oil from the oil cover.

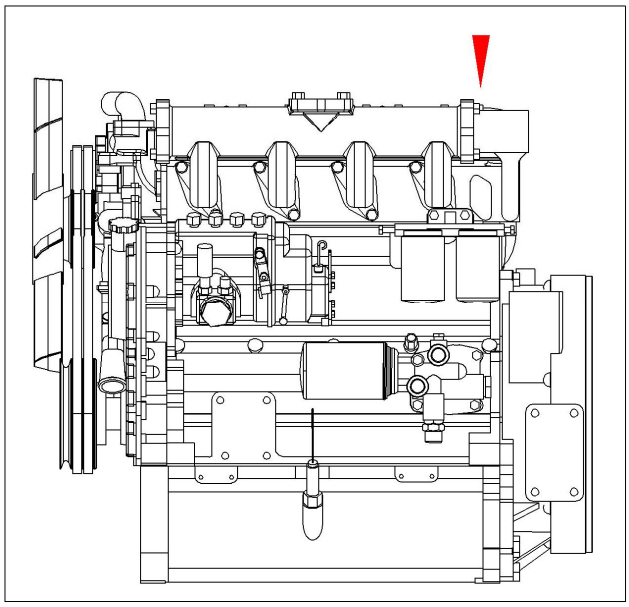

Pic 4－9

Check the hydraulic oil level in the tank

WARNING

The hydraulic oil in the normal work, the oil temperature rise. The temperature of the oil should be down before maintenance. There is pressure in the tank, first, release the cover on the hydraulic tank slowly， and discharge the air pressure in the tank， then it can be safe to remove the upper plate cover.

Pic 4-10

1. Put the machine on the level of firm ground. The bucket of the arm to the ground (Pic4-11)

2. Shut off the engine.

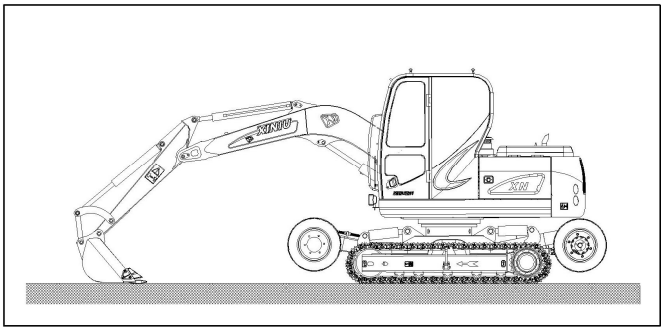

Pic 4-11

3. After the shutdown, the starting switch is hit to the "on" position, the control handle (including the travel handle) in the limit position back and forth several times, in order to release the residual hydraulic pressure, and then pull out the key.

4. Check the oil level, the oil level line between the specified marks, if need to add hydraulic oil.

Note
Oil level must not exceed the "H" mark line, overfilling will cause equipment damage and oil leak from the tank bottom discharge nozzle to release the excess oil.(Pic 4－12)

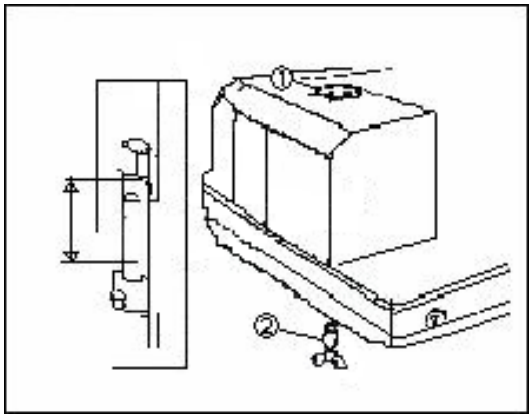

Pic 4-12

Check whether leakage of the hydraulic system

After work every day, check to make sure the hose, connector, cylinder and motor whether leakage, if so, check the leak and repair.

Check the fuel level

Warning
There should be special safety measures to prevent explosion and fire when filling up the fuel.

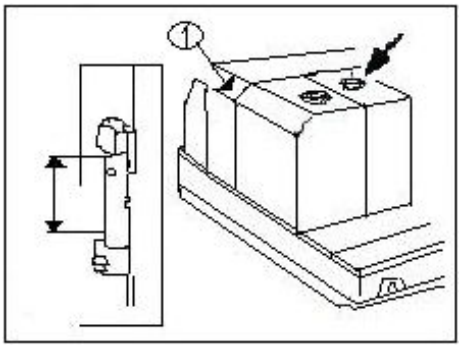

Pic 4-13

1. Make sure the fuel hose is fixed to the excavator before filling the fuel. By looking at the level,

confirm the fuel filler volume, fuel tank capacity of 120 liters.

2. Do not add excess fuel.
3. Tighten the gas cap after added the oil

Pic 4-14

Note：*If the respirator hole is blocked, a vacuum is formed inside the fuel tank. Fuel is not enough to supply the engine. Therefore, to keep the respirator hole clean.*

4. Check the fuel indicator in the cab for normal operation.

Note： *When the fuel reaches 12L or less that the fuel level warning lights is on, Please injection the fuel after finish the work!*

Check oil water separator

1. Open the cover, check the oil and water separator (Pic 4-15)， If there are some water in the container① (Pic 4-15)，the red bleach will float.
2. When floating ③ to the warning line, the water will be released (Pic 4-15)
3. Release the drain valve ④ at the bottom of the container. (Pic 4-15)
4. When the water is closed, close the valve.
5. At the top of the oil-water separator plug ⑤ can not be reused. If the plug is loose, replace and tighten.

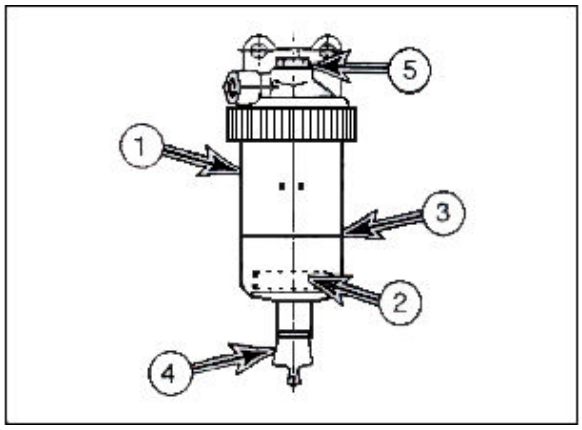

Pic 4-15

Check fuel system whether leakage

Check all parts of the engine，To ensure there is no leakage of the fuel system，If there is oil leakage, check the reason and repair it. Check cooling system, if necessary please add coolant.

Warning
Before opening the engine hood, let the engine cool down, and slowly release the hood in order not to leave a residual pressure. Clean the water tank when the engine is working, should be careful to ensure that the parts are fixed. Do not easily open the cap of the water tank, in the reserve tank to observe the coolant level.

1. When the engine is cool down, open the cap of the water tank, and check the coolant level, if necessary, add coolant to the water tank, as shown in the following table. Add coolant to protect.

Temperature	Cooling Water	Antifreeze
-10℃(15° F)	80%	20%
-15℃(5° F)	73%	27%
-20℃(-5° F)	67%	33%
-25℃(-15° F)	60%	40%
-30℃(-20° F)	56%	44%
-40℃(-30° F)	50%	50%

Check front window glass whether cleaner

1. Check the front window glass cleaning. There whether prejudice to view.
2. Protect the front window glass clean, So that the driver can fully look ahead.

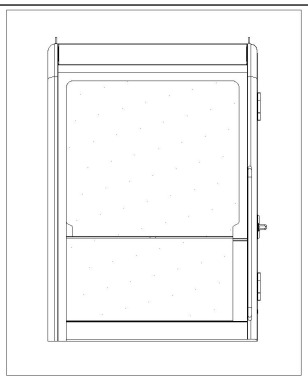

Pic 4—16

Note：*Clean the front windows, and do not flush the wire harness to prevent unnecessary failure of the electrical system. After cleaning, pay attention to the protection of the environment.*

Check the bucket teeth and side teeth whether worn down

1. Check whether wear down of the bucket teeth 1 every day.

2. In time to replace the seriously worn bucket teeth, or tooth seat 2 exposed.

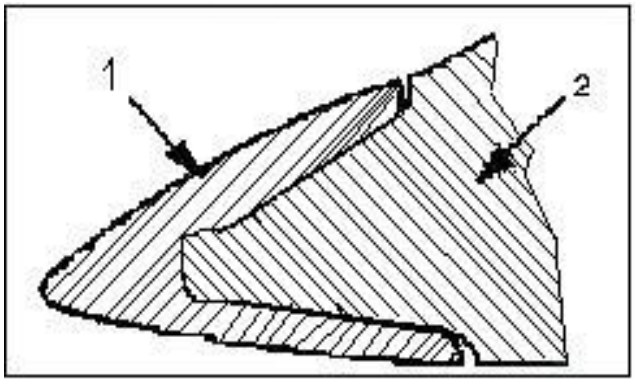

Pic 4-17

Check the engine fan belt whether worn or too tight

Note
Fan belt too loose, will cause the engine to overheat, Can not work properly, resulting in wear and tear. Too tight to cause damage to the pump, the generator bearing and the belt.

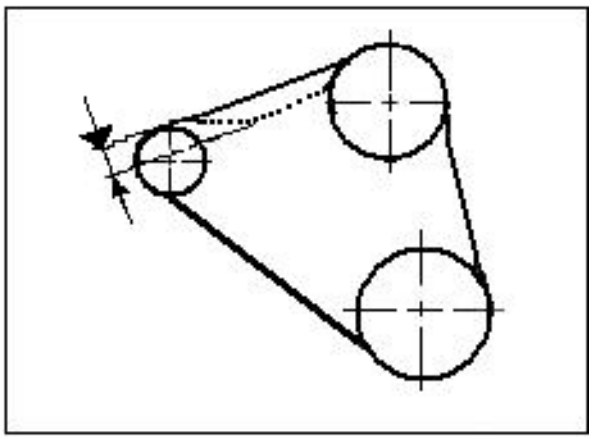

Pic 4-18

1. Check once every 10 hours.

2. Turn off the engine and press the belt between the fan belt pulley and the generator pulley to check the strength of the engine. (Pic4-18)

3. Check whether the engine belt is worn or broken, whether the connection is damaged or not. If there are any of the above, replace the new belt.

Adjust belt tightness

Note: if the belt is skewed, be adjusted.

1. Loosen adjusting bolt and fixed bolt of generator.
2. Tilt the generator to adjust the belt up force.
3. Adjust, tighten adjustment bolt and anchor bolt.
4. Idle running engine for 5 minutes, then re adjust the belt tightening force

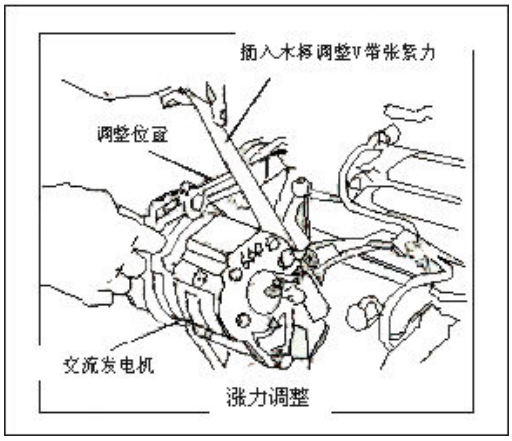

Pic4—19

Check structure fracture and weld crack

Check and lubricate the machine every day to check if there is any damage. Repair or replace before operation.

Check the working status of all external lights, speakers, and control indicators.

1. Take the start switch to the "open" position and observe each indicator light.
2. Fix all the light bulbs at this time.
3. Press the horn, if there is any failure to repair or replace.
4. Turn on and check all external work lights, replace the broken light bulb and the broken lamp.

Check the working status of all controllers.

1. Check the controller when the engine is fixed speed.
2. Open the low temperature hydraulic system began to heat up.
3. Remember all too slow or abnormal movements. Find out the reason and fix it before starting work.

Check the bolts and nuts whether loose or falling off

refer to4—20 “Inspection of bolt and nut”

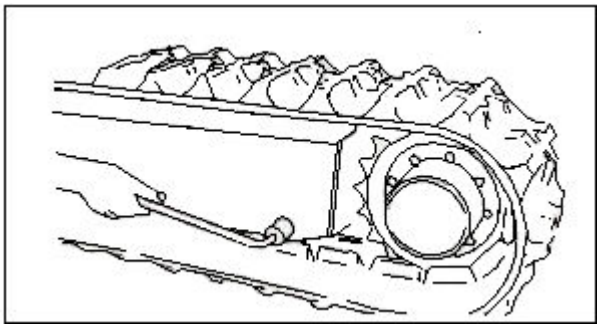

Pic 4-20

Check the track if there is too tight or too loose, wear and damaged parts (rail links, track plate, roller, guide wheel, driving wheel)

1. Check every day for all parts include track whether lost, damaged or worn. refer to4—36“Track tension”
2. Jacking two tracks, take speed test of two kinds of motor

Clean engine air filter

1. Remove snap spring type fixed outer cover.
2. Clean inside of the air filter

Pic 4-21

50 hours / Weekly maintenance

All l0 hours / daily maintenance check

Lubricating rotary bearing

1. Injection a few butter into Grease fitting

2. The bucket is lifted 20cm on the ground, the turntable rotation two times, each 90 degree slewing bearing lubrication.

Oil discharge valve of fuel tank

Open the valve at the bottom of the tank (Pic 4-22), to drain and debris.

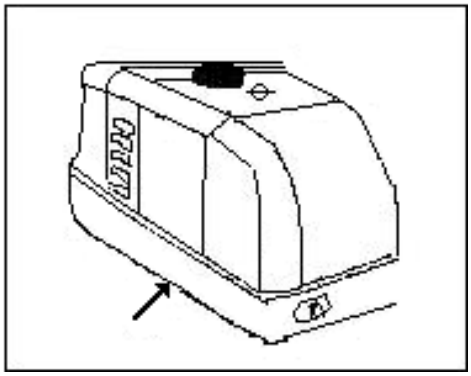

Pic 4-22

Change engine oil and filter

After 50 hours of first operation, replace the engine oil and filter, then replace it each 200 hours

Cleaning oil radiator, water tank and air conditioner condenser

▲Warning

Clean the radiator, with high pressure steam or water, to ensure that the relevant personnel to stand in the proper position. Pressure is too high will damage the radiator

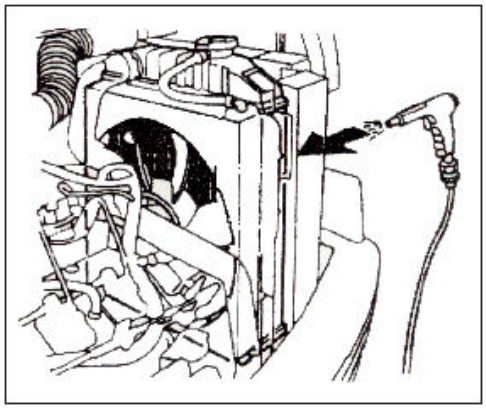

Pic 4-23

1. During the cleaning process, the worker need wear suitable safety products.
2. Use high pressure steam or water to clean the external parts of the radiator and the water tank, clean it from the outside of the engine parts, and then clean it out from the inside to

remove dirt and debris

Note： *Cover the inlet of the air filter to prevent water and other things from entering the engine.*

Check battery level and status

Check battery status，refer to4—31“Battery”。

Clean fuel tank inlet

Open the cap of the fuel tank① (Pic 4-24)， And clean up all the impurities in the filter, Clean up the filter with special equipment.

▲Warning
When repair the oil tank, take great care, in order to prevent fire or explosion. Immediately clean up spilled oil.

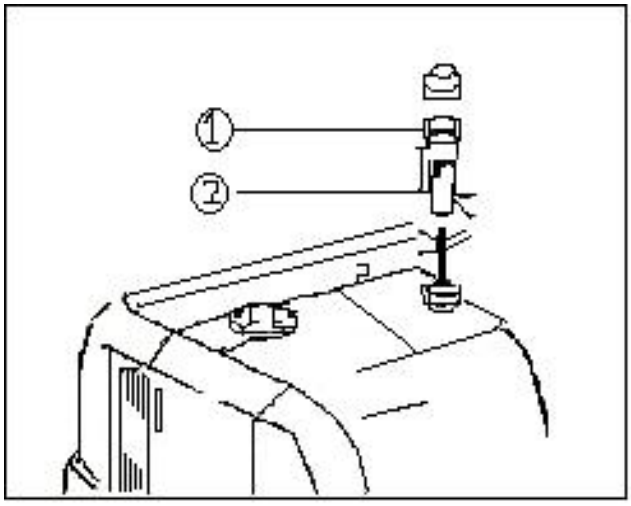

Pic 4-24

100 hour maintenance

Take all the 10 hours/ Daily maintenance and 50 hours/ Weekly maintenance

Clean the filter element of air filter

▲Warning
When the engine is working, do not clean or move the air filter. If using compressed air to clean parts, to take appropriate eye protection measures.

Pic 4-25

1. Install the air filter components, take into the cover (Pic 4-25), then put the filter element in the air filter.

Note：*If the indicator panel shows "on", the air filter must be opened. Replace the filter element every 500 hours or three months.*

2. From the inside out with compressed air to lean the filter. Air pressure can not exceed 205kPa (0.2 MPa).
3. Clean air cleaner housing and side cover.
4. Install the air filter element and the side cover correctly, tighten the side cover wing nut by hand, and do not use any tool.

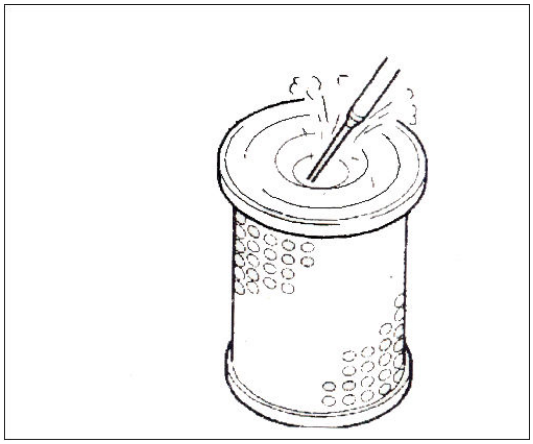

Pic 4-26

Replace hydraulic oil

For the new machine, after the use of 100 hours for the first time to replace the hydraulic oil, after every 1000 hours.

Replace hydraulic filter

▲Warning
After the normal operation of the machine, the hydraulic oil is very hot. Before the maintenance of any hydraulic components, the hydraulic oil should be fully cooled down.

Note
Confirm remove the water and dirt of hydraulic tank , especially the liquid filling port and filter installation

Note：*After the first operation 100 hours, replace the hydraulic oil filter, after every 500 hours to replace. Refer to the replacement procedure "Replacing the hydraulic filter " like 4 – 24pages*

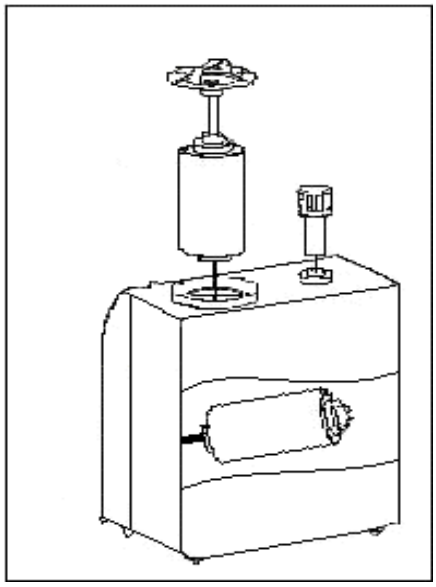

Pic 4-27

200 hour maintenance

Perform all 10 hours/ day, 50 hours /week, and 100 hours of maintenance.

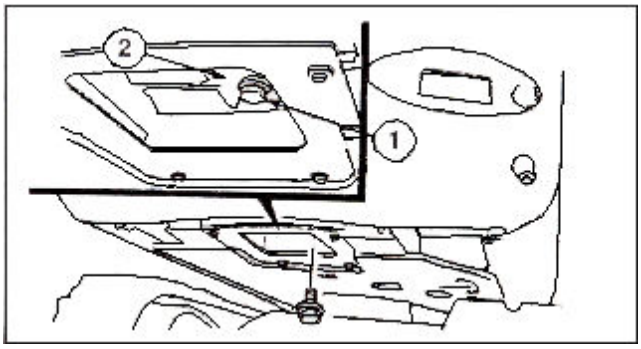

Replace engine oil and engine oil filter

Note： Work 50 hours after the first replacement, then every 200 hours to replace once.

Warning
When the engine is hot, do not change the engine oil, if replace the engine oil or the filter, the temperature of the engine should be cooled down

1. Below the engine, remove the oil plug① (Pic 4-28), drain the oil to the container, install the oil drain plug and tighten.

P

pic 4-28

2. Replace the oil filter, oil filter core is installed in the rotary type, (Pic 4-29), remove the filter.
3. When install the new filter, first put little lub on the filter ring, turn the filter till the top reach the gasket, then turn 3-4 circle to fix it well.
4. Fill in the correct type of engine oil, can refer to the manual recommended oil table selection.
5. Start engine and check oil pressure.
6. Shut off the engine and check if there is a leak in the oil filter.

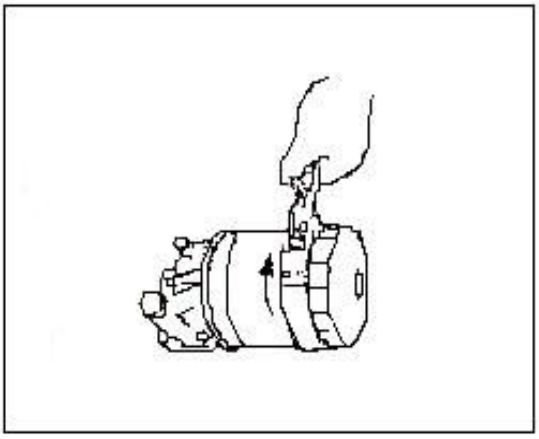

Pic 4-29

250 hours/Monthly maintenance

Perform all 10 hours/ daily, 50 hour weekly maintenance

Discharge water and impurities from the hydraulic oil tank.

1. Keep the machine in a fixed level, straighten the arm and take the bucket place on the ground.（Pic 4-30）
2. Switch off the engine

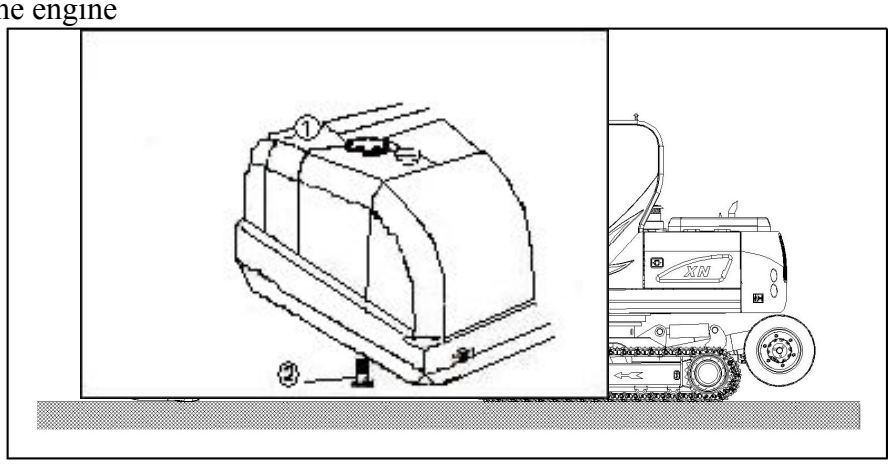

Pic 4-30

3. When the temperature cooled down of the oil, unclasp the cap ① (Pic 4-31) of the hydraulic oil tank and then drain the oil tank
4. Slowly loosen the oil drain plug ② at the bottom of the tank (Pic 4-31)，discharge water and impurities, and then install the drain plug and tighten.

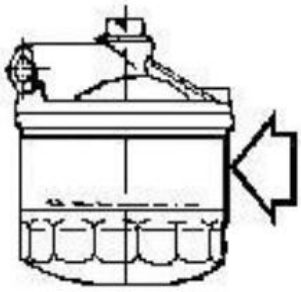

Pic 4-31

Check the connecting pin and the shaft of the front working device whether wear.

Check fuel system hose clamp

500 Hours / 3 months maintenance

Perform all 10 hours per day, 50 hours per week, 100 hours per week and 250 hours maintenance.

▲ Warning
After the engine is cooled, replace the three filter. Careful fire, smoking is strictly prohibited.

1. Replacement the fuel filter of engine.
2. Put a small container under the fuel filter.
3. From the fuel filter shell filter seat backspin, remove fuel element.
4. After cleaning the top filter, install the new fuel filter, rotating the fuel filter until the gasket and the top of the contact and then rotate 1 / 2 circle.

Note: the fuel filter gasket is covered with fuel oil
Note: the fuel filter cover with clean fuel, which can discharge air of Pic 4-32 fuel system

5. Start the engine and running 1-2 minutes then shutdown, check whether there is leakage phenomenon.

Change the radiator coolant

▲ Warning
First, allow the engine to cool down, and then let the cover slowly loose, to reduce the internal pressure. Clean the radiator in the process of engine operation. Be careful when working in the running engine, make sure the safety lever is in the locked position and hang on signs to remind people that the excavator is being repaired. If not necessary, do not remove the radiator cap, observe the coolant level in the storage tank.

1. Slowly open the upper cover of the radiator (Pic4-33) to release pressure.
2. Put a container under the radiator.
3. Close the discharge valve after discharge the coolant.
4. Filling the cleaning liquid for cooling system.
5. Idle running engine until the coolant temperature is expressed in the "green zone", and

then run for 10 minutes.

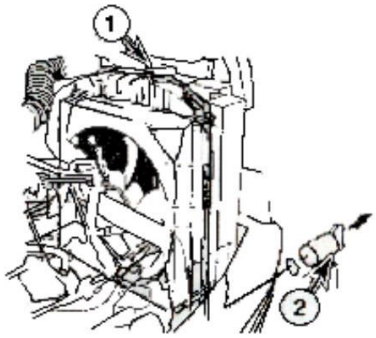

6. Cooling the engine
7. Discharge the cleaning liquid, to filling water for the system
8. And then run the engine, so that the water completely cycle up

Pic 4-33

9. Discharge water, Filled with antifreeze fluid of suitable to environment and temperature for system, reference coolant conPicuration table (Pic 4-11).
10. Do not install the radiator cap, run the engine to exhaust the air, let the radiator fill the liquid to the 50mm under the top.
11. Discharged coolant of reserve tank, drain the liquid of Evaporation tank then inject new liquid.

Replace hydraulic oil filter element

Note:

▲ Important
Confirm the clear drop water and dirt of top hydraulic tank, with special attention to the filling port and filter element mounting port

1 slowly loosen plug exhaust, then loosen the filter;
2 unscrew the bolts; remove the cover and sealing washer, Loosen the nut again; go down with the dirty filter element

3 remove the filter element

4 install the new filter element and O type ring, install the Valve, the spring and the upper cover.

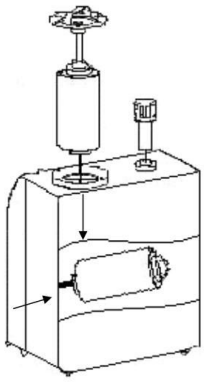

Pic4-34

5 check the liquid level in the hydraulic tank and fill in the hydraulic oil when needed.

Replace air filter element

Replace one time per operation 500 hours /three months

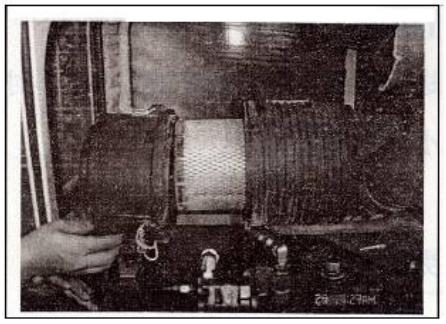

Pic 4-35

Check the oil level walking device walking on both sides of the reducer

▲ Warning
The lubricating oil is very hot after machine operation, cut off all the work system to cool down, before removing the plug shell, should first slowly loosen the bolts to make the air relieve pressure.

Note: Drain used oil after operation of first time for 500 hours, and then replace per work for 100 hours.

1 make sure that the machine works on a solid level. Drain all of the used oil for speed reducer.

2 turn the track, until the oil port ①，②，③， (Pic 4-36) in the device as shown in the Pic.

3 Remove the plug②, (Pic 4-36), Refueling until oil reaches oil port .Install the plug②

4.Repeat these steps on another travel motor

500 Hours / 3 months maintenance

Perform all 10 hours per day, 50 hour per week and 100 hour, 250 hour and 500 hour per year maintenance.

Replace hydraulic oil

▲ Warning
Hydraulic oil is very hot, after the machine normal operation. Therefore, It needs to make the oil to cool down before the maintenance of hydraulic components. There are pressures in the hydraulic oil tank, please slowly loose the plug of hydraulic oil tank upper part to relieve pressure, and can remove safely the tank cap or upper cover after relieve pressure.

Pic 4-37

▲ Important
Confirm clean the stolen goods or water on the hydraulic oil tank, especially around the flushing hole and hole filter

Note: According to the type of excavation and the front of the excavator is installed special equipment (such as broken devices, etc.). Hydraulic oil may need to shorten the replacement cycle.

Note: Drain used oil after operation of first time for 100 hours,and then replace per work for 1000 hours.

1.Stop the machine on solid ground level, as shown in the Pic, stretching the arm and put the bucket on the ground.

2.Stop the engine after lock the safety lever.

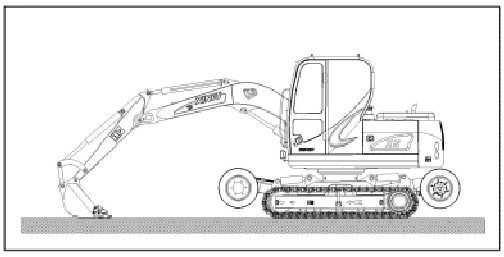

Pic 4-38

3.Slowly open the tank cap and the plug cover ① of oil tank to relieve pressure(Pic 4 - 39) .Remove the plug②(4 - 39), the old oil is discharged into a capacity of 120 liters in the container. Discharge the used oil to a 120 liter container .

4.Then install the plug and tighten.

▲ Important
Be careful of oil spray when unloading the oil plug

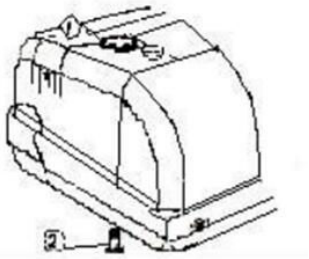

Pic 4-39

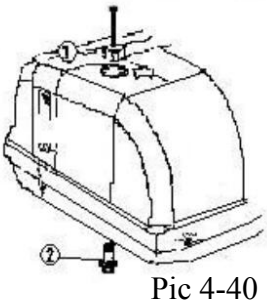

Pic 4-40

1.Open the top cover ①(Pic 4-39).

2.Fill the oil tank, use the scale on the side of oil tank to check the oil level.

3.Install top cover

Replace the oil of travel reducer(each one for two sides)

▲ Warning
The lubricating oil is very hot after machine working, cut off all the work system to cool down, slowly loosen the bolts to make the air relieve pressure before removing the motor housing and the bolt at the inspection hole.

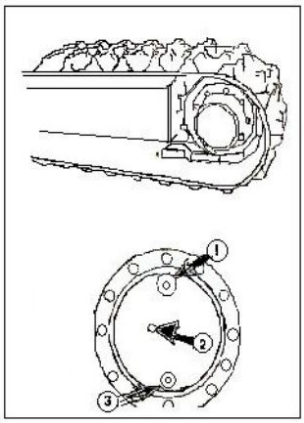

Pic 4-11

Note: Discharge of the used oil after the first time working for 500 hours, and then per 100 hours 1 time.

Note: The gear tank's capacity is 0.6 liters, cannot be mixed use.

1.Put the machine on a solid level.

2.Rotate the track until the plug① to the plug ③(Pic 4-41) Please check these position on the picture.

3.Put a container under the plug ③, remove the plug (① and ③) then discharge the oil.
4.Install the plug③, then take the plug of hole② down ,injection new oil from the hole ① until the oil level reaches the hole ② ,install the plug (① and ②).
5.Repeat above steps in the other travel motor.
Note: The knob two screw turquoises are46 - 51Nm / 4.7-5.2Kg.m, The intermediate plug 11.77-12.5Nm / 1.27-1.30Kg.m

Check and adjust the cleaning valve★★

Check the bolt torque★★

★★ It's complete by Rhinoceros designated agents

1200 hour maintenance
Perform all 10 hours per day, 50 hours per week and 100 hour, 250 hour and 500 hour per year maintenance.
Perform all50 per day,150,250,500 and 1000 hours maintenance.
Check alternator and starter motor (completed by designated agent of Rhinoceros)
Check shock proof device of all rubber .
Proceed and record the results of periodic inspection.
Check if the welded structure is cracked, open or damaged.
Check the welded structure has or doesn't have cracked, open or damaged.

4000 hours / 2 year maintenance

Important parts / periodic replacement

should carry out periodic inspection in order to ensure the safety of operation and work, replace the following parts to increase security, these components are easy to wear, heat or fatigue, even if these parts look good, also should be replaced in the set period.
Often replace the relevant parts such as gaskets, O ring, and can only use pure products

Main parts		Periodic replacement parts	Replacement time
engine		Fuel hose (fuel tank to filter)	2 years or 4000 hours
		Fuel hose (fuel tank to fuel injection pump)	
		Heating hose (heater connected to the engine)	
Hydraulic system	Machine body	Pump suction hose	
		Pump out oil hose	
		Swing hose	
	Working device	Boom cylinder hose	
		Bucket rod cylinder hose	
		Bucket cylinder hose	
		Pilot joystick hose	

Electrical system

Note: it is strictly prohibited to dismantle the Electrical circuit and components, consultation with the agent of Rhinoceros to resolve before maintenance

Battery

▲Warning
To confirmed the engine has been stopped and put the start switch on the “OFF” position before maintenance the battery. Battery can produce hydrogen. In particular, the battery is not charged, there is a risk of explosion. To confirm that the flame, combustion and spark away from the battery, the electrolyte is diluted sulfuric acid. Should be careful to place the battery, the electrolyte is easy to cause combustion. Wash with plenty of water immediately when the electrolyte is on the clothes or skin. If the electrolyte can get into the eyes, rinse immediately with plenty of water and go to see the doctor as soon as possible. When installing the battery, always wear safety glasses. Whendismantle the battery, the first remove the "-" pole or the ground, so that it will avoid the electric spark or arc generated, to avoid the explosion. When the battery is installed, the first connection "+" pole and then join "-". To ensure the reliable connection of terminals。

1. in the cold winter, when start the engine and the preheating process, theconsumption of battery is very big, at the same time,
the temperature decreases, the power bottle performance degradation.

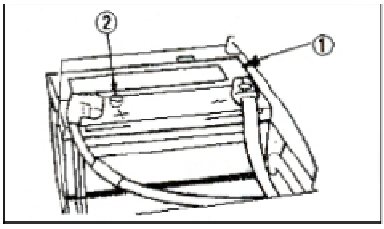

Pic 4-42

2. in particularly cold weather, the battery can be removed at night to put in a warm place, so that it helps to improve the performance of the battery.
3. check the battery level.
Note: the battery is installed in the original factory
is maintenance free
The battery liquid only maintain the appropriate level Under normal conditions.
4.To check the battery’s (Pic 4-42) charging status through brightness by observing the internal settings of the indicator

- Green: normal
- Black: full charge, check the generator.
- Transparent: inadequate electrolyte, with a new battery instead.

Note: the color of the display according to the manufacturer is different, can refer to the relevant description of the battery.

Scraper bucket

Replacement the bucket tooth

▲Warning
Should wear a helmet, protective gloves and eye protection cover when the replacement the bucket teeth ,because there are maybe a metal fly out, Pick the bucket up,The bucket flat on the ground, stop the engine, lock the control handle, then replace the bucket teeth

1.To determine a benchmark, often to check for wear or tear whethernot extended, do not allow the bucket teeth serious wear and tear to Bucket tooth seat leakage in external. Reference the Pic 4-43.

Pic4-43

2.Replacement of shovel teeth, used a hammer ①(Pic 4-44) and punch② to remove the pin and lock pad.

3.Used a knife as far as possible to scrape the bucket teeth clean after remove the bucket teeth.

4.Insert a new tooth, mounted on the lock pin.

5.Replace the pin when replace the bucket booth .

6.Check the lock pin. The presence of pin replacement.

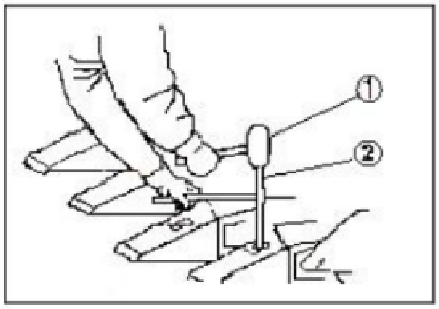

Check the lock pin. Replace the pin when following conditions exist . Pic4-44

1.The lock pin is too short when two surface alignment,

2.Rubber crawler side seam, the steel ball easy to sideslip.

3 .Squeeze the steel ball into the interior of the ball.

Replace the O ring of bucket

▲Warning
Because metal objects may splash, Should replace the pin with gloves, goggles and safety caps

Adjusting method and data

Install new bucket

1.Should measure the size of the bucket inner ear and bucket arm bushing width, if install new bucket.

2 .These two dimensions subtraction, is the size of the gasket needed

▲Warning
The bucket at the free state when check the connection gap in the bucket, , at other times, put the bucket down on the ground or fixed the

bucket with support block, stop the engine, lock control mechanism, suspension of warning signs, to prevent the bucket movement

Install the replacement of bucket, the method of add gasket

1.Pick the bucket up when connection the bucket, put the bucket arm extends outward. Reduce the distance of arm from ground. Make the distance of bucket tooth from the ground is 50 to 100mm and the position is convenient for measuring the size

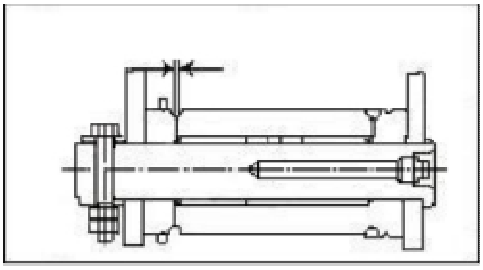

The Pic 4-50

2.Push the bucket to one side after installed the O ring , check the clearance for the other side of bucket and bucket arm bushing, The total clearance section of the inner ear and the bucket bushing should be 0.2-0.7mm, with tight will aggravate the wear, the gap is too large, excessive noise, relaxation action.
3.Force to push bucket to the other side, check the gap again.
4.Dimension the bolt and pin when need to adjust, according to need, dimension or increase the gasket, both sides should use the same quantity of gaskets.

Track tension

▲Warning

The safely measurement the track tension degree need 2 person, a person driving excavator make the side of tracked excavator leave the ground, another one to measurement, must be very careful to prevent the machine movement. Driver the excavator to a flat ground, if necessary, use the support block.
The track adjustment cylinder with high pressure

Track adjustment cylinder pressure is high, so don't make the pressure drop suddenly. The grease cylinder valve body should not loose a whole circle for a time, it should be slowly to release pressure, at the same time, the your body should be far away from the valve.

The Crawler track link pin and bushing will be wear in normal working, make the track tension degree. Therefore, periodic adjustment is necessary, and it is also necessary for the normal work.
1.To brace one side of track to check the excavator's tension, as shown in Pic(4 - 51).

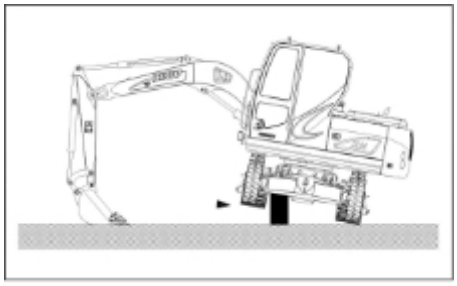

2.Measuring clearance of maximum outer round edge of trust wheel chassis and The lowest point on the track plate track plane, the recommended value is 10 20mm (equivalent to A=180 ~ 190mm).
Pic 4-51

Note: Should be clear the chassis before measured if there are too many dirt, dust or other material on the chassis assembly,

Note: the machine with a rubber covering (optional) check the same steps as the adjustment.

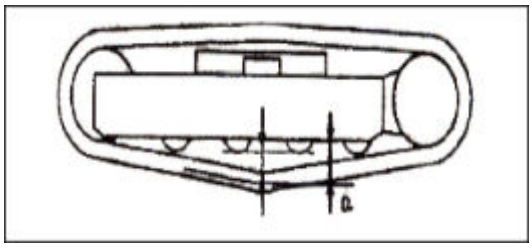

Pic 4-52

3. If measuring he gap of roller bearing surface and middle rail links on the plane should be 20 ~ 35mm(4-53)

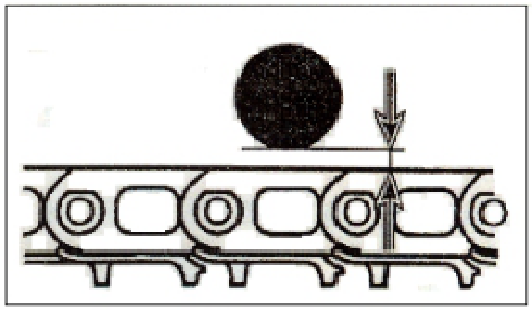

4. rubber tracks (Pic4 - 54) have 15 - 20mm grp.
Pic 4-53

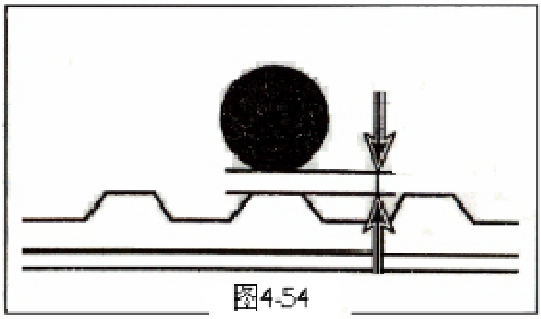

Pic 4-54

▲Warning
Track adjustment cylinder pressure is high, so don't make the pressure drop suddenly. The grease cylinder valve body should not loose a whole circle for a time, it should be slowly to release pressure, at the same time, your body should be far away from the valve.

5. The track tension adjustment is realized by installing the joint in the center of the side frame of the chassis 1 (Picure 4 - 55). Add the butter, the length of the cylinder increases, the longer the length of the cylinder, the higher the pressure of the crawler spring cylinder of the steering wheel.

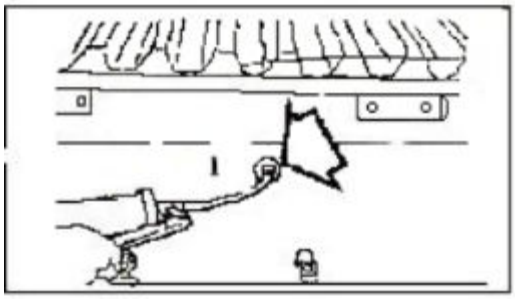

Pic 4-55

6. If the track does not have enough clearance to adjust the tight, this time can be released by the butter in the cylinder, so that the guide wheel 3 back (Picure 4 - 56)

Note: regulating valve regulating torque to 59 - 9Kg/m - 88N.m/6

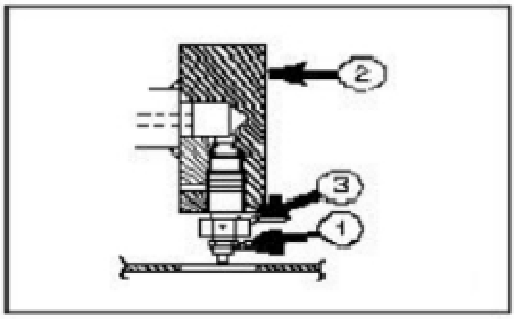

Maintenance under special conditions

Pic 5-56

Condition	Maintenance requirements
Working in the mud, water, or rain	1 to check whether there is a joint loose around the car 2 Clean the mud, rocks, gravel on the machine after work, Check whether the welding parts are damaged and whether the parts are loose 3complete daily lubrication and maintenance. 4 if the acid rain or corrosive substances in the work, the application of water to wash the affected parts.
Work in a dusty or hot environment.	1 More frequent cleaning air intake filter. 2 Cleaning oil radiator and the water tank and remove embedded dust and dirty 3 More frequent cleaning of air and filter elements. 4 Check and clear the starting motor and generator if necessary.
Working in a rock environment	1 Check the chassis and track assembly for damage or excessive wear and tear. 2 Check if the joints and bolts are loose or damaged. 3 Further relax track. 4 More frequent inspection bucket or breaker damage or excessive wear 5 If necessary, install a top frame and a front frametoavoid damage to the falling object.
Working in a particularly cold area	1 Use thesuitable for ambient temperature of the fuel, hydraulic oil and Lubricating oil. 2Check antifreeze with specific gravity meter to ensure it has a phaseAnti freezing performance. 3Confirm the battery temperature environment, especially when the cold night Between the battery removed, stored in a warm place. 4Timely remove the mud on the body to prevent damage to equipment when it is frozen

Bolt and nut inspection

Check all fasteners after first time working for 50 hours and working for 250 hours per time, if there is loose or lost, should be re tightened or the installation of new products, we must use a torque wrench.

▲important
To clean up the fastener before tightening. If the weight of bolt looseness, negotiation and rhino heavy agents to solve.

Note: when installing, remove rust, sand, dirt and mud.
Installation time. To lubricate to reduce wear and tear.

NO	Checkpoint		Bolt diameter.mm	Qty	Bolt head size	Torque	
						Grade	N.m
1	Engine shock mounting bolt	Forward	12	4	19	8.8（10.9）	79（117）
		Rear	12	4	19	8.8（10.9）	79（117）
2	Hydraulic, fuel tank mounting bolt		12	8	19	8.8	79
3	Connections of hydraulic hose and pipe		PF1/4	……	……		26.5～29.4
			PF3/8	……	……		46～51
			PF1/2	……	……		56～62
4	Oil pump fixing bolt		16	2	24	10.9	280
5	Control valve fixed bolt		10	4	16	10.9	68
6	Control valve bracket mounting bolt		12	4	19	8.8（10.9）	79（117）
7	Rotary part mounting bolt		10	4	16	10.9	68
8	Cab shock mounting bolt		12	8	18	8.8	79
9	Cab mounting nut		14	4	24	8.8	125
10	Rotary bearing mounting bolt	With platform	20	24	30		390
		With chassis	18	24	27		330
11	Driving device and crawler frame fixing bolt		14	24	22	10.9	185
12	Drive wheel mounting		14	24	22	10.9	185

	bolt					
13	Thrust wheelmounting bolt	12	40	18	10.9	117
14	Top bolt	8	……	13	8.8	23
		10	……	16	8.8	46
15	Counterweight bolt	30	4	46	8.8	580

Long term storage

	Maintenance requirements
Clean	1.use a high-pressure water cleaning chassis and track assembly.
Lubrication	1.Perform all normal lubrication. 2. Apply a layer of anti rust oil on the surface of the exposed metal parts, such as the hydraulic cylinder piston rod, etc.. 3.In all the control connection part and a control cylinder at the oil (control valve etc.).
Battary	1.Dismention the battery or battery wire after full power, store up.
Cooling system	1.Check the coolant level in the coolant reserve tank is in the normal range. 2.Every 90 days or 750 hours of work with a specific gravity meter check antifreeze or coolant antifreeze level, with reference to the requirements of the level of antifreeze
Hydraulic system	1 refer to the "hydraulic system heating up method" specified in this manual, and start the engine once a month.

Transport

Excavator transport should comply with local and national laws and regulations, if there is no understanding of local government departments can be asked.
Check to go through the width of the road, load limit and traffic restrictions, may need to go through special applications and permits.

Loading and unloading

▲Danger

The width, height, length and weight of the machine must be known when the transport.

Handling machinery is a dangerous operation, to be particularly careful, to low-speed operation of the engine and low speed.

Inclined plate must be able to withstand the weight of the machine, if necessary, in the slope under the cushion block, increase the support force.

Make sure that there is no butter, mud and so on, to prevent the machine from slipping.

Loading and unloading machinery, the trailer should be parked in a solid level of the ground.

When running a machine on a trailer, the engine will run at a minimum speed and walk at a minimum speed.

According to the local transportation regulations, the machine is firmly fixed in the trailer

Loading

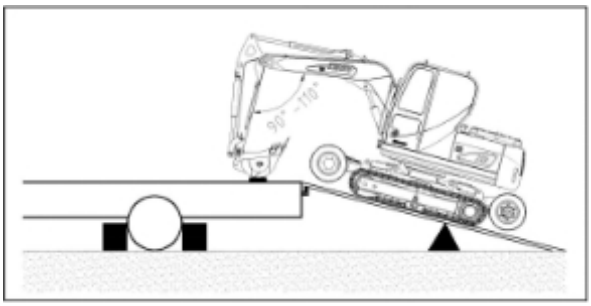

1 Make sure the trailer is parked on a solid level, Pic5-1
2 Check the wheel to ensure that it will not move during loading and unloading.
3 The use of the inclined plate should be able to bear the weight of the machine, if necessary, in the under the inclined plate and the support block to increase the support force. Pic 5-1
4 The angle should be not more than 15 degrees angle, angle is too large in loading and unloading will cause trouble.

5 Loading machine with a minimum running speed and engine speed.
6 Be careful when loading and unloading, do not hit the dirt shovel, the push the soil shovel to improve on the back, when the machine moves on the car,with the bucket protection against sudden tilting track.

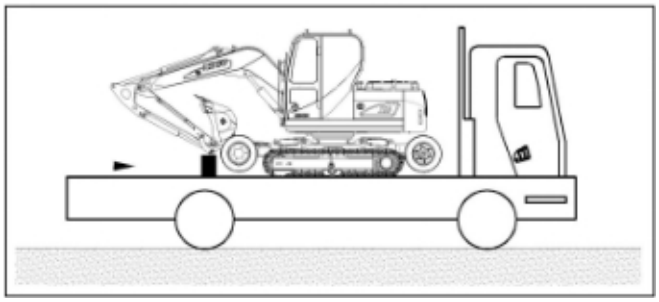

Pic 5-2

7 Transport, gently lift bucket, bucket rod.
8 Engine to "minimum idle" operation.
9 In the bucket under the pad pieces of wood.
10 To fully reduce the shovel.
11 Put the safety bar (Pic 5 - 3) in the "lock" position. (pilot operated)

12 Stop and pull out the key.

13.Ensure the safety of excavator mounted to the trailer before transportation, on the track after the cushion block, according to

Pic 5-3

the provisions of local laws and regulations, fixed with a rope or chain.

Note: do not put the rope on the track, as shown in Pic 5-4. Fix the rope through the track.

14.According to the transport size table and the full width of the excavator full width of the table, fixed the excavator well then as shown in Pic.

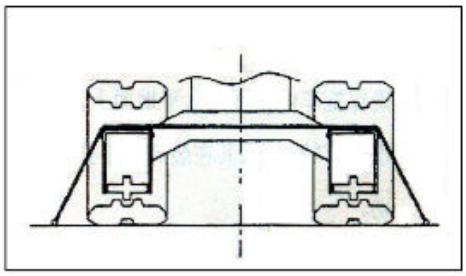

Pic 5-4

V. Common failures and troubleshooting methods

Should take measures in time of problems found when overhaul, adjust and maintenance of hydraulic or electrical systems, need contact the designated agent of Rhinoceros.

Fault	Reason	Solution measures
The engine can't be started or it's hard to start	●The starter has a problem ●Battery charging problem ● Preheat circuit or improper use of preheat ●Injection timing is not accurate ●Oil pipeline blockage ●Fuel filter blocking ● The fuel system is water, dust, or air. ● Nozzle dirty or low injection pressure ●Fuel injection pump failure ●Fuel shortage ● Intake and exhaust system blocking	● Replace or repair starter ● Charge or replace the new battery ● Repair or replace the preheating plug ● Check fuel injection timing ● Cleaning circuit ● Clean or replace the fuel filter ● Exclude air, clean the oil circuit ● To local maintenance point maintenance ● Consulting company agents ● Fuel charging ● Flow inlet and exhaust system
Engine knock, running irregularor stop	● Fuel filter blocking ● Fuel system with dirt or air ● Oil filter clogging, nozzle dirty or faulty ● High pressure tubing damage ● Fuel shortage ● Accelerator connection cannot be adjusted ● Fuel injection pump failure ● Injection pump timing is not right or nozzle card dead	● Cleaning filter ● Exhaust, cleaning circuit ● To local maintenance point maintenance ● Replace high pressure tubing ● Fuel charging ● Consulting company agents ● Consulting company agents ● Check nozzle when check the injection timing

Engine power down	● Fuel is mixed with air ● Oil supply is not smooth ● Injection timing change ● Injector working poor ● Air filter blocking ● Into the exhaust valve clearance or valve does not seal ● Cylinder gasket, air leakage ● Poor fuel injection pump ● Engine overheating	● Exhaust air ●Check cleaning ● Adjust according to the specified value ● Check the working pressure and spray atomization ● Cleaning filter element ● Adjusting valve clearance and grinding ● Replace cylinder pad ● Consulting company agents ● Check if the coolant is correct. Whether there is too loose water pump and belt, there should be repaired or replaced, and clear channel obstruction.
Engine overheating	● Coolant level is too low ● Temperature sensor fault ● Air filter blocking ● Fan belt loose or failure ● The cooling system of channel dirt ● Temperature and failure ● Oil is bad or too much oil	● Add coolant ● Replace new sensor ● Clean air filter ● Re tighten or replace ● Cleaning channel ● replace ● Change the oil
Oil pressure is too low	● Low oil level ● Oil filter blocking ● Pipeline leakage ● Engine cooling water temperature is too high	● Fuel charging ● Clean the oil filter ● Tighten and replace ● Properly prepare the coolant mixture ratio or consult the local agent.
The engine smoke black smoke	● Inferior fuel ● Air filter blocking ● Injection timing ● Bad atomizing nozzle	● Use the correct fuel ● Replacethe filter element ● The adjustment according to the specified value

		● check, change parts
Engine with white smoke	● Inferior fuel ● Engine oil too much ● Injection timing is wrong ● There is water in the cylinder and in the fuel.	● Use the correct fuel ● Recommended oil recovery ● Adjust according to the specified value ● Check for fuel.
Battery does not charge	● Connection loose or rusty ● Engine belt loose or faulty	● Clean or tighten ● Clean or tighten ● Consulting company agents
The starter does not work or slow turning	● Connection loose or rusty ● Engine belt loose or faulty ● Engine does not charge	● Clean or tighten ● replace ● Consulting company agents
The starter and generator charging operation does not show	● Engine fault ● Wire bad ● Burn out of the line ● Sensor Fault ● Light bulb burning	● Consulting company agents ● Overhaul or replacement ● replace ● replace ● replace
Hydraulic system parts action is too slow	● Hydraulic oil cooling ● Pilot system pressure is too low ● Error in use of hydraulic oil ● Engine speed is too slow	● Temperature manipulation ● Adjust according to the specified value ● Use correct hydraulic oil ● Consulting company agents
The hydraulic oil temperature is too high	● Error in use of hydraulic oil ● Circuit block ● Hydraulic oil filter block ● Oil pump wear ● Oil cooler block ● Oil cooler fault	● Use correct hydraulic oil ● Consulting company agents ● Clean or replace ● Consulting company agents ● Oil cooler ● Consulting company agents

	● Relief valve pressure is too high, the main safety valve or rotary system ● Oil is too dirty	● Consulting company agents ● Put the oil in and come back
Hydraulic oil emulsion or foam	● Oil tank to oil pump pipeline leak ● Hydraulic oil use fault ● Hydraulic oil with water ● Oil level is too low	● Tighten maintenance ● Use correct hydraulic oil ● Oil ● Corrected oil surface
Oil pressure is too low or no pressure	● Hydraulic pump damage ● The system of oil shortage ● Safety valve failure	● Change pump ● Fuel charging ● Consulting company agents
All components can't work	● Hydraulic oil pump damage	● Consulting company agents
Oil pump noise and noise unchanged	● Lack of hydraulic oil ● Oil suction pipe leakage ● Auxiliary pump damage ● Hydraulic safety control device does not work	● Fuel charging ● Repair or replace ● replace ● Check repair
Each cylinder or motor is unable to work or does not work	● Oil pump damage ● The main safety valve pressure becomes low ● Oil tank surface is low ● Oil filter clogging ● Oil seal damage ● Piston rod damage caused by oil spills ● Pilot valve failure ● First catheter break or leak	● Consulting company agents ● Re adjustment of pressure ● Fuel charging ● Cleaning oil filter ● Repair or replace ● Repair or replace ● replace ● Repair or replace
Walking device does	● Walking device damage	● Consulting company agents

not work		
Travelis not normal	● Oil pump performance ● Swing motor damage ● Pilot valve does not work	● Consulting company agents ● Consulting company agents ● Consulting company agents
Rotation is not normal	●Oil pump performance ● Swing motor damage ● Pilot valve does not work	● Consulting company agents ● Consulting company agents ● Consulting company agents
Rotation discontinuity	● Swing gear wear ● Swing support or ball damage ● Lack of oil ● Control valve leakage	● Consulting company agents ● Consulting company agents ● Consulting company agents ● Consulting company agents

X9 Wheel-crawler excavator			
序号 Item	名称Chinese name	英文名称 English name	数量Qty
1	下支架	Lower frame	1
2	行走马达	Travelling motor	2
3	驱动轮	Driving wheel	2
4	支重轮	Thrust wheel	10
5	托链轮	Carrier roller	2
6	链条	Chain	2
7	后桥架	Rear axle frame	1
8	前桥架	Front axle frame	1
9	前桥	Front axle	1
10	后桥	Rear axle	1
11	轮胎	Tires	4
12	起升缸	Lifting cylinder	4
13	回转支承	Slewing bearing	1
14	上支架	Upper frame	1
15	驾驶室	Cabin	1

16	配重	Counter weight	1
17	上机罩	Upper hood	1
18	消声器	Exhaust silencer	1
19	反光镜	Reflector	2
20	灯	Light	3
21	动臂	Boom	1
22	动臂缸	Boom cylinder	1
23	斗杆缸	Bucket arm cylinder	1
24	斗杆	Bucket arm	1
25	铲斗缸	Bucket cylinder	1
26	连杆	Connecting rod	1
27	推杆	Push rod	右左各1
28	铲斗	Bucket	1
29	前机罩	Front hood	1
30	预滤器	Prefilter	1
31	空滤	Air filter	1
32	液压油箱	Hydraulic oil tank	1
33	柴油箱	Fuel tank	1

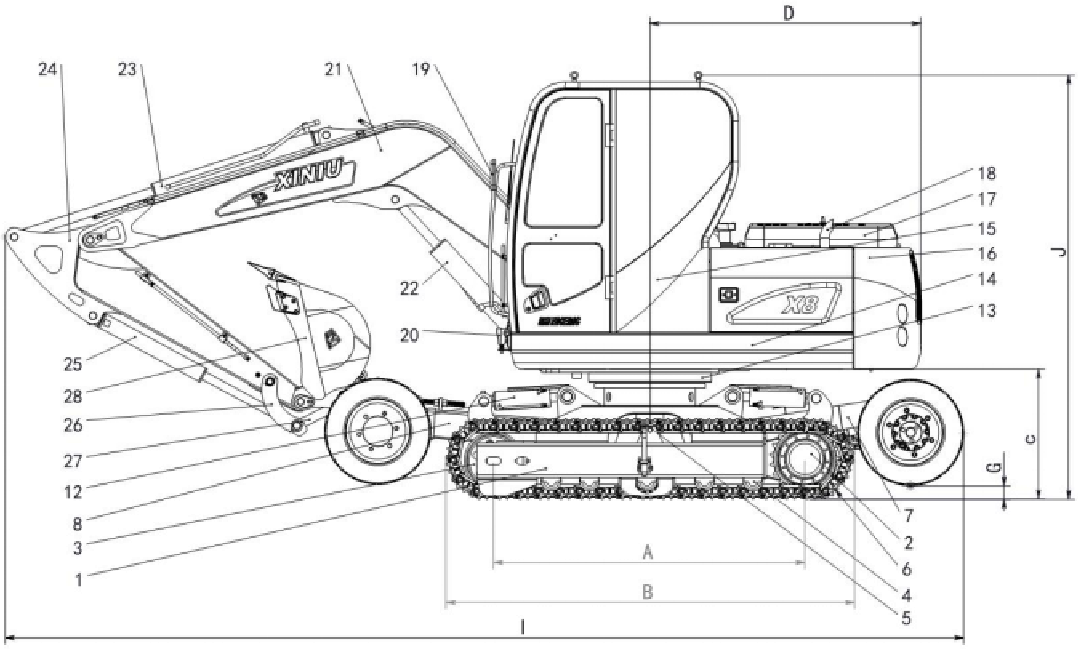

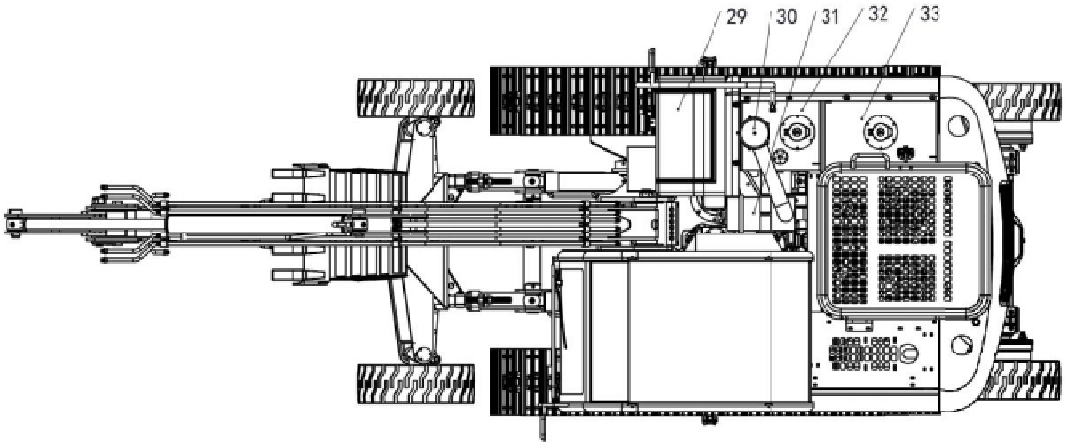

Accessories and spare parts list

1、Attachment list

1、Foot pad

2、Interior decoration

3、Percussion hammer

4、Fire Extinguisher

2、 accessories

Straight screwdriver	2 Pieces
Cross screwdriver	2 Pieces
Inner six angle	1 Pieces
Hammer	1 Pieces
Pliers	1 Pieces
Grease gun	1 Pieces
Open end wrench	(10×12 13×16 32×36) x1
Double offset ring spanner	(17×19 22×24 24×27) x1
Multifunctional filter wrench	1 Pieces
Tool box	1 Pieces

3、Random file

1、Operation and maintenance manual 1

2、Three package service certificate 1

3、Certificate 1

Remark: Engine random tool, accessory document according to engine packing list check and acceptance